RECEIVED
MAR 15 2016
CITY OF SNELLVILLE
PLANNING DEPARTMENT

REAR ELEVATION

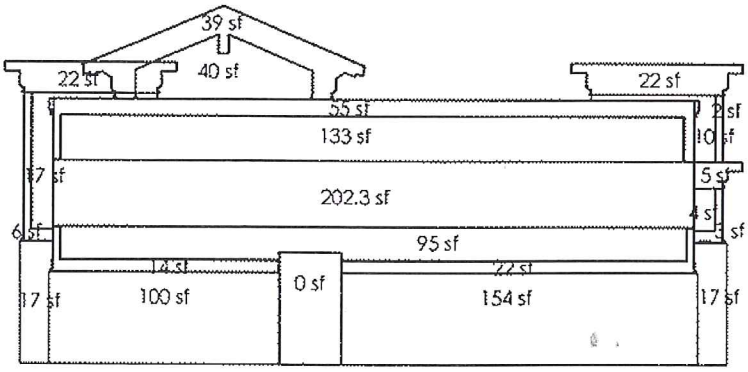

metal roof / fascia board/ wood bracket total = 22 + 39 + 22 + 5 + 202.3= 290 sf

EIFS trim total = 6 + 55 + 14 + 22 + 2 + 3 = 102 sf

EIFS FIELD total = 17 + 40 +133 + 95 + 10 + 4 = 299 sf

brick total = 17 + 100 + 154 +17 = 288 sf

area total = 290 + 102 + 299 + 288 = 979 sf
299/979 = 30.5% EIFS

FRONT ELEVATION

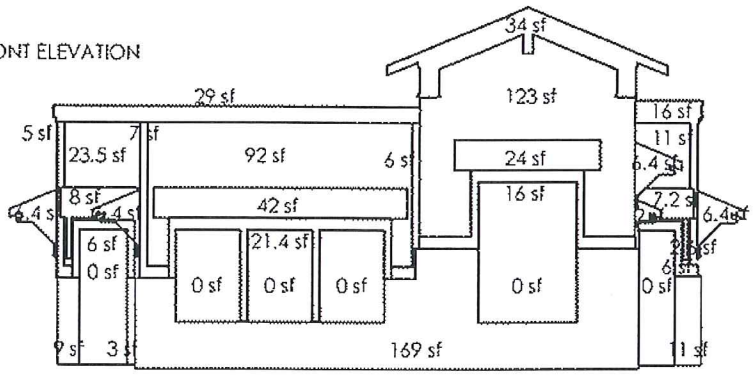

METAL ROOF/ CANOPY TOTAL = 6.4 + 8 + 6.4 + 42 + 34 + 24 + 6.4 + 7.2 + 2 + 6.4 = 143 sf

EIFS trim total = 5 + 6 + 29 + 7 + 21.4 + 6 + 16 + 16 +6 = 112 sf

EIFS field total = 23.5 + 92 + 123 + 11+ 2.6 = 252 sf

brick total = 9 + 3 + 169 + 11 = 192 sf

area total = 215 +142.8 + 119.6 + 129.1 + 123 + 192 = 699 sf
252/699 = 36% EIFS

RECEIVED
MAR 15 2016
CITY OF SNELLVILLE
PLANNING DEPARTMENT

DRIVE-THRU ELEVATION

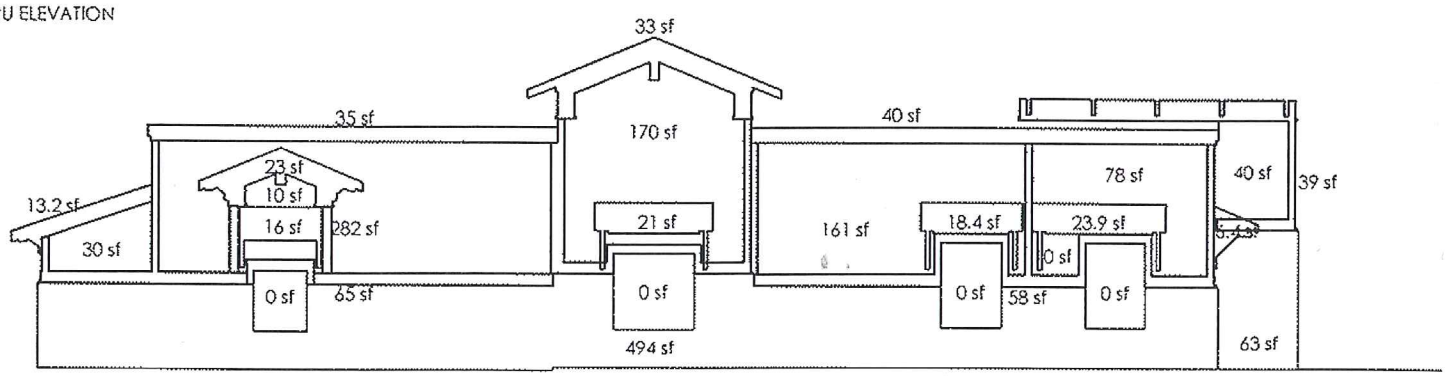

metal roof / HARDIE FASCIA BOARD / wood bracket total = 13.2 + 23 + 16 + 33 + 21 + 18.4 + 23.9 +6.4 = 155 sf

EIFS trim total = 35 + 65 + 40 + 58 + 39 = 237 sf

FIELD EIFS total = 30 + 10 + 282 + 170 + 161 + 10 + 78 + 40 = 781 sf

brick total = 494 + 63 = 557 sf

area total = 155 + 237 + 781 + 557 = 1,730 sf
781/1730 = 45% EIFS

NON DRIVE-THRU ELEVATION

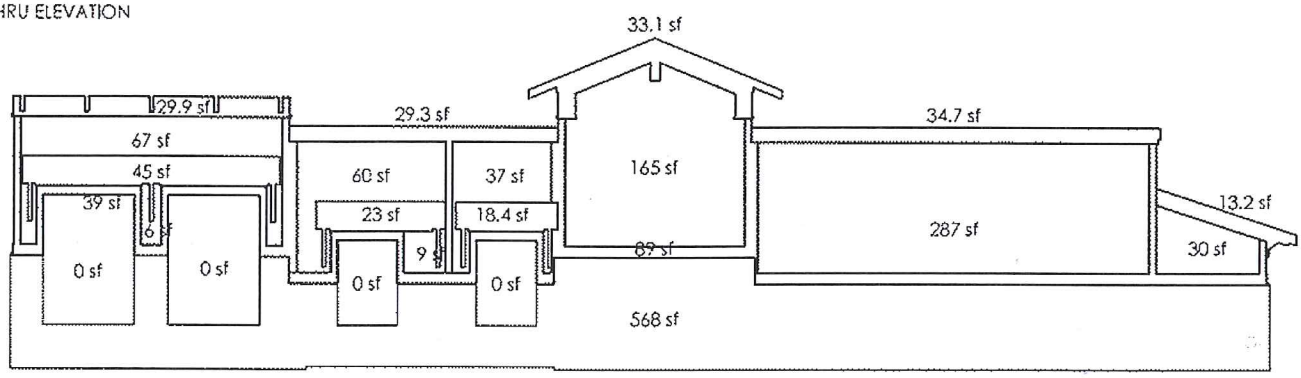

metal roof / wood bracket total = 45 + 23 + 18.4 + 33.1 + 13.2 = 133 sf

EIFS trim total = 29.9 + 39 + 29.3 + 89 + 34.7 = 215 sf

EIFS field total = 67 + 6 + 9 + 60 + 37 + 165 + 287 + 30 = 661 sf

brick total = 568 sf

area total = 133 + 215 + 661 + 568 = 1,577 sf
661/1,577 = 42% EIFS