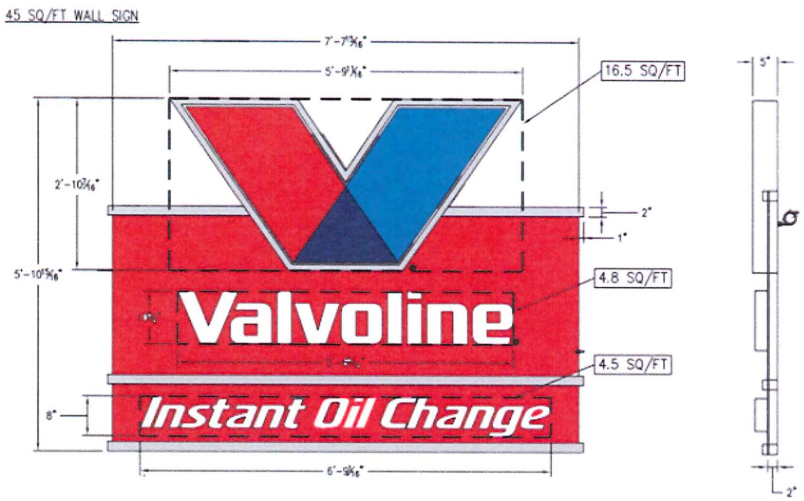

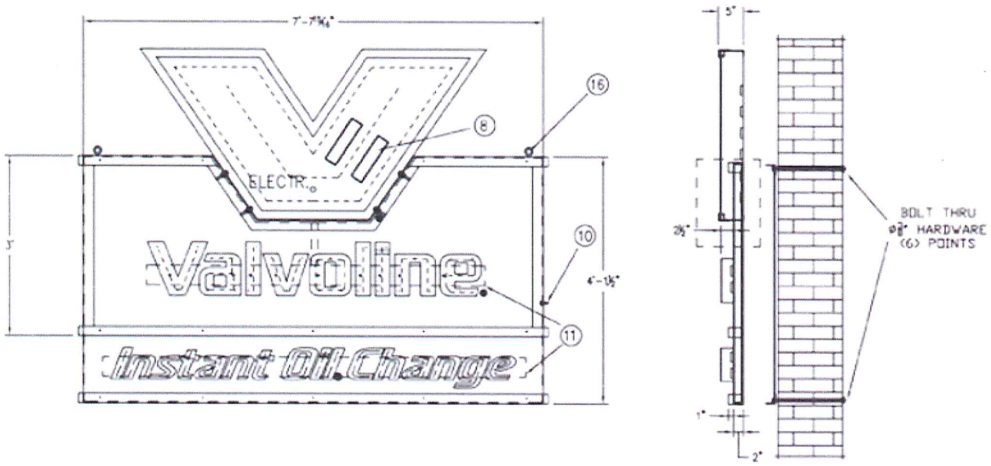

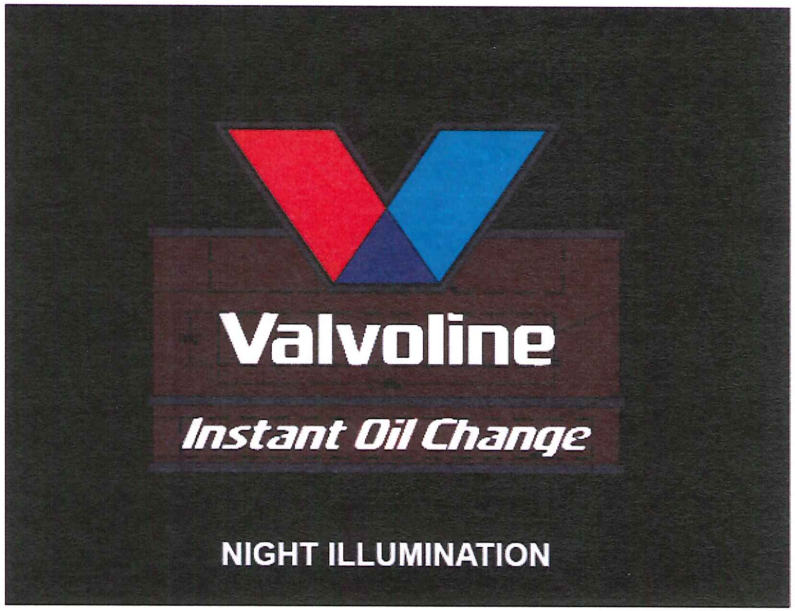

Valvoline Instant Oil Change Trademarked Logo Sign

- Individually Mounted Lettering
- Illuminated Text & V Logo only

The final exterior images and sign designs for your project may differ from the above due to the necessity of complying with regulations regarding your specific property as determined by local government authorities.

Approved by_____

Date_____

RECEIVED
JAN 11 2019
CITY OF
PLANNING

Valvoline.

Flat - Channel Letter Logo Signage

RECEIVED
JAN 11 2019
CITY OF ... VILLE
PLA... ...PMENT

45 SQ/FT WALL SIGN

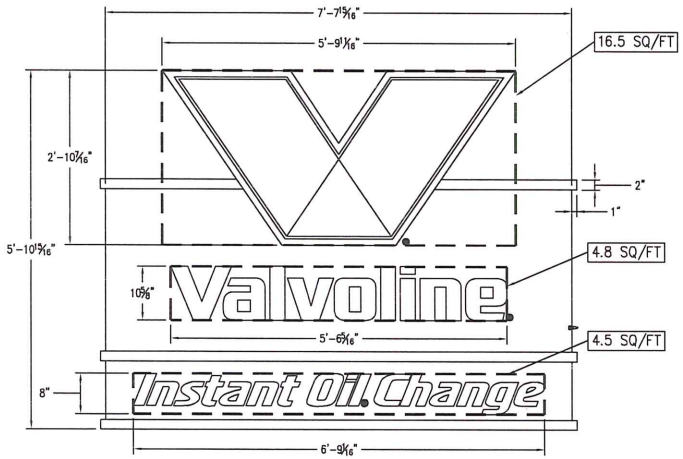

ELEVATION
SCALE: 1/2"=1'-0"

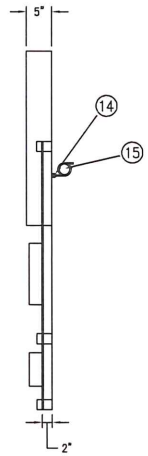

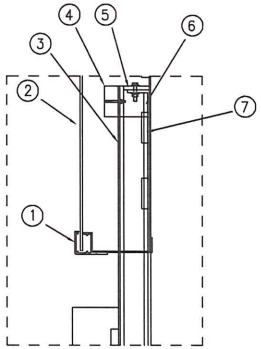

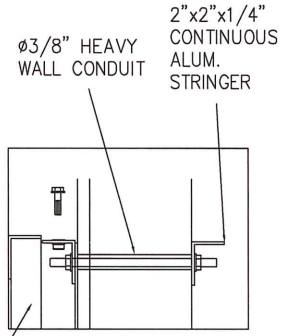

INSTALL DETAIL

MATERIAL LIST			
ITEM	FSC #	QTY	DESCRIPTION
1	A00045	16'	1-1/2" x 1-1/2" KEY SLOT F-RETAINER 288"
2	PL0002	9 SF	.150 X 48 X 82 CUT TO EXACT SIZE CLEAR LEXAN SGC100
3	A00004	32 SF	.090 5052-H32 ALUMINUM PAPER INTERLEAVE 60" X 120"
4		25'	1"X1 1/2"X1/8" ALUM. SQ. TUBE
5	A00024	25'	2" X 2" X 1/8" 6063-T52 ALUMINUM SHARP CORNERS ANGLE 16FT
6	A00075	15'	1-1/2" X 1-1/2" X 3/16" [.1875] 6063-T52 ALUMINUM SHARP CORNERS
7		53'	OPTICS ELLIPTIX OTSE-X2-BW65 BITRO 6500K LED MODULE (80 M MAX. LOAD)
8		2	MEAN WELL 60W 12V DRIVER
9		3 SF	.040" ALUM.
9A		15 SF	1/2" THICK #2447 WHITE ACRYLIC
9B			SCREWED INTO PLASTIC (TOP AND BOTTOM OF LETTER ONLY)
9C	A00056	15 SF	.080" WHITE /WHITE ALUMINUM SHEET 60" X 120"
10	E00021	1	SPENCO 24" TOGGLE SWITCH 118505/24/SP
11		2	.063" FABRICATED SLIM ALUM. LIGHT-TRACK ON THE BACK OF PANEL
12	C00074		8X15X1/2" SLOTTED HEX-W S/M/S ZINC
13	C00105	16	3/8"X16 LARGE FLANGED RIVET NUT
14	E00008	1	STRAIGHT LIQ. TITE CONNECT 1/2" 16205B
15		10'	LIQ. TITE
16	C00113	2	DIA. 1/2" STEEL LIFTING EYEBOLT
PAINT & VINYL			
ITEM	FSC #	QTY	DESCRIPTION
A	P00124		6401-74215 B66T00304 VOC RED GALLON #804715738
B	P00127		6403-47951 B66W00351 VOC SILVER GALLON
C	P00125		6401-71215 B66T00304 VOC BLUE GALLON #804716081
D			YELLOW/LIGHT BLUE VINYL
E	V00005	N/A	WHITE 7725-10 48" X 50YD
F	V00127	2 SF	EUROPEAN BLUE 3630-137 48" X 10YD
G	V00097	3 SF	STD RED 3630-33 36" x 50YD
H	V00122	3 SF	PROCESS BLUE 3630-337 48" X 10YD
SHIPPING LIST			
ITEM	FSC #	QTY	DESCRIPTION
1		1	31.3 SF FLAT DESIGN WALL SIGN
2			TOUCH UP PAINTS
3		14'	1-1/2" X 1-1/2" X 3/16" [.1875] 6063-T52 ALUMINUM SHARP COR. ANGLE
4		6'	ø3/8" TREADED ROD
5	C00099	12	3/8"X16 HEX NUT ZINC
6		12	3/8" WASHER

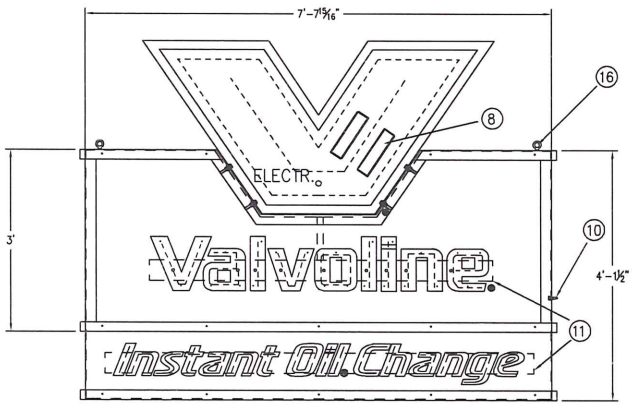

LEDS & ELECTR.
SCALE: 1/2"=1'-0"

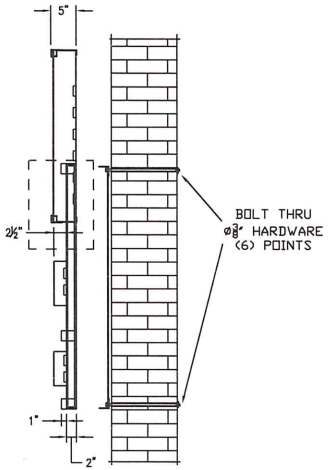

SECTION
SCALE: 1/2"=1'-0"

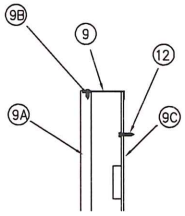

LTR SECT.

(2) REQ'D

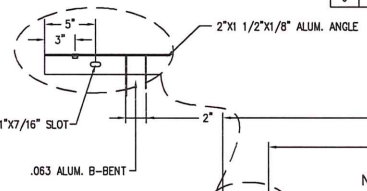

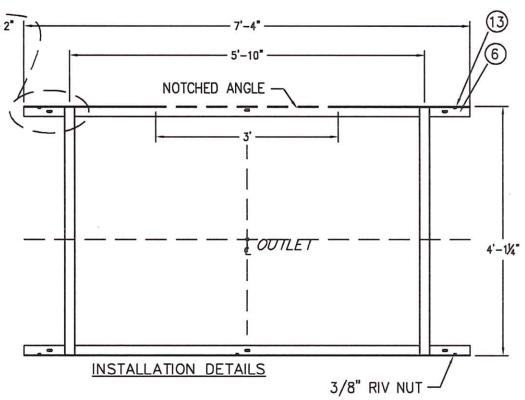

INSTALLATION DETAILS

FAIRMONT Sign Company
3750 E. OUTER DR., DETROIT, MI 48234
PHONE: 313-368-4000 FAX: 313-368-1649

CUSTOMER APPROVAL DATE

This is an original unpublished drawing, created by F.S.C. It is submitted for your use in connection with a project being planned for you by F.S.C. It is not to be shown, copied, reproduced, or exhibited in any fashion without the express written approval by F.S.C. © FAIRMONT SIGN COMPANY, 2002

DATE	REVISION	INIT
*	*	*
*	*	*
*	*	*
*	*	*
*	*	*

CUSTOMER/LOGO: VALVOLINE INSTANT OIL CHANGE
ADDRESS: 1823 S SOUTHEAST LOOP 323
CITY, STATE: TYLER TX

DWG TITLE: CONST
DESCRIPTION: 45 SF FLAT LOGO WALL SIGN
FILE NAME: VALVOLINE2011\WALLSIGNS\FLATWALLSIGNS
BLOCK NAME:

WO# : 87562
DATE: 2/15/17
DRAWN BY: FT
SHEET #: 1 OF #: 1

RECEIVED
JAN 11 2019
CITY OF ... VILLE
PLANNING D... TMENT

Int. Cl.: 37

Prior U.S. Cls.: 100, 103 and 106

Reg. No. 3,642,387

United States Patent and Trademark Office

Registered June 23, 2009

SERVICE MARK
PRINCIPAL REGISTER

ASHLAND LICENSING AND INTELLECTUAL PROPERTY LLC (DELAWARE LIMITED LIABILITY COMPANY)
5200 BLAZER PARKWAY
DUBLIN, OH 43017

FOR: VEHICLE PREVENTIVE MAINTENANCE SERVICES, NAMELY, LUBRICATING CHASSIS; CHANGING MOTOR OIL; CHANGING OIL AND AIR FILTERS; MEASURING FOR PROPER FLUID LEVELS AND REFILLING TRANSMISSION, OIL, DIFFERENTIAL, BRAKE, POWER STEERING, RADIATOR, WINDSHIELD WASHER AND BATTERY RESERVOIRS TO THE PROPER LEVELS; CHANGING WINDSHIELD WASHER BLADES; AND INFLATING TIRES TO PROPER PRESSURE, IN CLASS 37 (U.S. CLS. 100, 103 AND 106).

FIRST USE 9-19-2007; IN COMMERCE 9-19-2007.

OWNER OF U.S. REG. NOS. 1,531,277, 2,913,216 AND OTHERS.

NO CLAIM IS MADE TO THE EXCLUSIVE RIGHT TO USE "OIL CHANGE", APART FROM THE MARK AS SHOWN.

THE COLOR(S) RED, BLUE, DARK BLUE, WHITE AND SILVER IS/ARE CLAIMED AS A FEATURE OF THE MARK.

THE MARK CONSISTS OF A STYLIZED "V" WHEREIN THE COLOR RED APPEARS IN THE TRAPEZOID SHAPE COMPRISING THE LEFT VERTICAL ARM OF THE LETTER "V". THE COLOR BLUE APPEARS IN THE TRAPEZOID SHAPE COMPRISING THE RIGHT VERTICAL ARM OF THE LETTER "V". THE COLOR DARK BLUE APPEARS IN THE TRIANGLE SHAPE COMPRISING THE BASE OF THE LETTER "V". THE STYLIZED V IS PARTIALLY EMBEDDED IN A RED SQUARE CONTAINING THE WORDS "VALVOLINE INSTANT OIL CHANGE" WHICH ARE IN WHITE. THE COLOR SILVER APPEARS IN THE OUTLINING.

SEC. 2(F) AS TO: "INSTANT".

SER. NO. 77-534,514, FILED 7-30-2008.

EDWARD FENNESSY, EXAMINING ATTORNEY