PUBLIC HEARING & REGULAR BUSINESS MEETING
OF MAYOR AND COUNCIL
CITY OF SNELLVILLE, GEORGIA
MONDAY, NOVEMBER 28, 2022

Present: Mayor Barbara Bender, Mayor Pro Tem Dave Emanuel, Council Members Solange Destang, Cristy Lenski, Gretchen Schulz and Tod Warner. Also present City Manager Butch Sanders, Assistant City Manager Matthew Pepper, City Attorney Chuck Ross with Powell and Edwards Attorneys at Law, Assistant Chief Dave Matson, Planning and Development Director Jason Thompson, Public Information Officer Brian Arrington, IT Administrator Erika Fleeman, and City Clerk Melisa Arnold.

CALL TO ORDER
Mayor Bender called the meeting to order at 7:36 p.m.

INVOCATION
Chaplain Jackie Turner gave the invocation.

PLEDGE TO THE FLAG
Mayor Bender led the Pledge of Allegiance.

CEREMONIAL MATTERS
None

MINUTES
Approve the Minutes of the November 14, 2022 Meetings
Mayor Pro Tem Emanuel made a motion to approve the minutes of the November 14, 2022 meetings, 2nd by Council Member Destang; voted 5 in favor and 1 abstention with Council Member Schulz abstaining. (Per Article II, Division 1, Section 2-47 of the Code of Ordinances, an abstention shall be counted as an affirmative vote.) Motion approved.

INVITED GUESTS
None

COMMITTEE / DEPARTMENT REPORTS
None

APPROVAL OF THE AGENDA
Council Member Lenski made a motion to approve the November 28, 2022 agenda, 2nd by Mayor Pro Tem Emanuel; voted 6 in favor and 0 opposed, motion approved.

PUBLIC HEARING

2nd Reading - RZ 22-08 – Consideration and action on application by Lazaro Mota (applicant) and Britt and Camp, LLC (property owner) requesting to amend the Official Zoning Map from RS-30 (Single-family Residential) District to RS-5 (Singlefamily Residential) District for an 11-lot single-family (detached) residential subdivision on a 2.765± acre site having a gross density of 3.978 units per acre, located at 2706 Lenora Church Road, Snellville, Georgia (Tax Parcel 5028 001)

Planning Director Thompson gave an overview of the application and advised that the Planning Commission and Planning Department both recommend approval with conditions. Council asked questions about the applications.

Mitch Peevy with Alliance Engineering and Planning, 299 South Main Street, Alpharetta, was present representing the applicant. He spoke about the application and advised that changes were made from the last submittals and stated that the applicant was in agreement with all the conditions suggested by the Planning staff. Council asked Mr. Peevy questions about the development.

Mayor Bender opened the floor to public comment and the following people came forward:

Tricia Rawlins, 2088 Harbour Oaks Drive, Snellville spoke in favor of the application.

No one else came forward so Mayor Bender closed public comment.

Matt Reeves with Anderson, Tate, & Carr, One Sugarloaf Center, 1960 Satellite Blvd, Suite 4000, Duluth, came forward and spoke about the development. He noted that the Planning Commission and Planning Department recommended approval and noted that Constitutional Objections have been submitted for legal purposes.

Council Member Warner made a motion to approve RZ 22-08 with the Planning Commission recommended conditions 1 through 8 and the addition of conditions 9 and 10:

1. The property shall be developed in accordance with the rezoning site plan entitled "Proposed Subdivision 2706 Lenora Church Road, Snellville, GA 30078", sealed and dated 8-15-2022 (stamped received 8-29-2022), with modifications permitted to meet conditions of zoning or State, County, and City regulations. Substantial variation from the rezoning site plan, as determined by the Director of Planning and Development and City Manager will require Mayor and Council approval.

2. All dwelling driveways shall be a minimum of twenty-two feet (22') in length, measured from the front of the garage door to the leading edge of the sidewalk (edge closest to dwelling), and shall be wide enough to accommodate the parking of two vehicles.

3. A Property Owner's Association shall be established for the continuous maintenance of open space, stormwater detention facility, entrance signage and landscaping.

4. A minimum twenty (20) percent of the total site area must be conserved as open space and subject to the Open Space regulations of Sec. 401-2 Article 1 of Chapter 4 of the Snellville Unified Development Ordinance.

5. Subdivision entrance signage (if any) shall be located on Open Space.

6. Signs higher than 15 feet or larger than 225 square feet are prohibited.

7. A densely planted landscape buffer shall be provided between the stormwater detention facility and southern property boundary where adjacent to the Lenora Church Road public right of way as shown on the 8-15-2022 site plan.

8. Non-substantial variances, as determined by the Director of Planning and Development and City Manager for the design, development, or zoning requirements of the Snellville Unified Development Ordinance, must be submitted in writing for Administrative Variance approval consideration by the Director of Planning and Development.

9. All parcels shall be subject to a mandatory HOA. HOA must provide for Special Assessments to be imposed upon its members for capital expenditures, specifically including maintenance of any detention/retention/water quality structures/ponds.

10. HOA must enter into a maintenance agreement with the City that it is responsible for the maintenance and upkeep of any detention/retention/water quality structures/ponds. In the event that the HOA fails to repair such structure, the City will have the authority, but not the responsibility to make any necessary repairs and the HOA will reimburse the City for such expenditures. If the HOA does not have adequate funds on hand to reimburse the City, the HOA shall assess its members for the full amount of the repairs so as to reimburse the City.

Council Member Destang seconded the motion; voted 5 in favor and 1 opposed with Council Member Lenski casting the opposing vote, motion approved. (A copy of ORD 2022-17 is attached to and made a part of these minutes.)

<u>2nd Reading - UDO 22-02 – Consideration and action on a text amendment to Section 207-6. (Signs) of Article 7 of Chapter 200 (Zoning and Land Use) of the Unified Development Ordinance for the City of Snellville, Georgia</u>

Planning Director Thompson gave an overview of the text amendment to the UDO that deals with housekeeping matters with the exception of a new section being added that addresses a Master Signage Plan to be submitted in the form of a Special Use Permit (SUP) for certain districts and land parcels within the Grove development. Mayor Bender explained that this is a City item therefore there is no applicant.

Mayor Bender opened the floor for public comment and no one came forward so public comment was closed.

Council Member Schulz made a motion to approve UDO 22-02, 2nd by Mayor Pro Tem Emanuel; voted 6 in favor and 0 opposed, motion approved. (A copy of ORD UDO 22-02 is attached to and made a part of these minutes.)

2nd Reading - MSP 22-01 – Consideration and action on a Master Signage Plan for The Grove at Towne Center, a master-planned mixed-use development on a 0.3± acre site near the intersections of Oak Road, Clower Street, Wisteria Drive, and North Road, Snellville, Georgia
Planning Director Thompson gave an overview of the plan and explained that this covers every type of sign that will be allowed in the Towne Center and clarifies and allows for requests for sign types not listed in the code.

Mayor Bender advised the applicant was not present to speak about the plan.

Mayor Pro Tem Emanuel made a motion to approve MSP 22-01, 2nd by Council Member Destang.

Mayor Bender opened the floor for public comment and no one came forward so public comment was closed.

The motion was voted 6 in favor and 0 opposed, motion approved. (A copy of ORD 2022-18 is attached to and made a part of these minutes.)

2nd Reading - SUP 22-05 – Consideration and Action on application by 2338 Scenic Highway, LLC (applicant and property owner) requesting a Special Use Permit for a Restaurant with Drive-Thru and variance to increase the 10 feet maximum front yard building setback to ±35 feet for a Dairy Queen Grill & Chill restaurant with drive-thru on a 1.71± acre parcel, zoned BG (General Business) District and located in the Towne Center Overlay District, 2340 Scenic Highway, Snellville, Georgia (Tax Parcel 5026 316)
Planning Director Thompson gave an overview of the application and explained that the UDO puts restrictions on drive-thrus to allow Mayor and Council to decide where they would fit in the best. He went over the variances requested in the application and said that approval is recommended with conditions. He answered questions of the Council.

Architect James Wilkerson was present representing the applicant and the Dairy Queen franchise and spoke about the development.

Mayor Bender opened the floor for public comment and no one came forward so public comment was closed.

Council Member Lenski made a motion to deny SUP 22-05, 2nd by Council Member Warner.

Mayor Bender asked Mr. Wilkerson about withdrawing and after discussion he withdrew the application.

Council Member Lenski made a motion to accept the withdrawal, 2nd by Council Member Warner; voted 6 in favor and 0 opposed, motion approved.

2nd Reading - RZ 22-09 SUP 22-06 – Consideration and Action on applications by Park Place Snellville, LLC (applicant and property owner) requesting to amend the Official Zoning Map for the City of Snellville, Georgia from BG (General Business) District to HSB (Highway Service Business) District and request for a Special Use Permit for a 3-story, 100,149 sq. ft. Climate Controlled Self-Storage Facility on a 1.82± acre site located in the Park Place commercial retail development, 1915 Pharrs Road, Snellville, Georgia (Tax Parcel 5056 362)
Planning Director Thompson gave an overview of the application and advised that the Planning Department recommends approval with conditions. He answered questions of the Mayor and Council.

Jack Wilson, 295 South Culver Street, Lawrenceville was present representing the applicant. He spoke about the history of the property and the proposed development. He advised that the applicant does accept the conditions as discussed.

Mayor Bender opened the floor to public comment and the following people came forward:
Gaye Bruce, 1710 Woodberry Run Drive, Snellville spoke against the application.
Kurt Schulz, 2027 Tanglewood Drive, Snellville spoke in favor of the application.

No one else came forward so Mayor Bender closed public comment.

Jack Wilson came forward and spoke about the application.

Council Member Warner made a motion to approve RZ 22-09 with the recommended conditions except for additional verbiage added in condition #2:

1. All variances and conditions applicable to the subject property and previously approved on 7-10-2017 by the Mayor and Council for case #RZ 17-06 LUP 17-04 are hereby repealed.

2. The property shall be developed in general accordance with the rezoning site plan entitled "Proposed Storage Climate Controlled, Snellville, Georgia", dated 9-12-2022 (stamped received 10-26-2022) in Exhibit "B", a copy of which is attached hereto and incorporated herein by reference, including the design rendering as supplied in the applicant's submittals with modifications permitted to meet conditions of zoning or State, County, and City regulations. Substantial variation from the conceptual rezoning site plan, as determined by the Director of Planning and Development will require Mayor and Council approval, after receiving recommendations by the Planning Department and Planning Commission.

3. Uses involving adult entertainment, including the sale or display of adult magazines, books, videos and as further defined by the Adult Entertainment Ordinance in effect on the date this condition is imposed, are prohibited.

4. Signs higher than 15 feet or larger than 225 square feet are prohibited.

Council Member Lenski seconded the motion; voted 5 in favor and 1 opposed with Mayor Bender casting the opposing vote; motion approved. (A copy of ORD 2022-20 is attached to and made a part of these minutes.)

Mayor Pro Tem Emanuel made a motion to approve SUP 22-06, 2nd by Council Member Lenski; voted 6 in favor and 0 opposed, motion approved. (A copy of ORD 2022-21 is attached to and made a part of these minutes.)

1st Reading - SUP 22-07 – Consideration and Action on application by Brian Vu, ABN Investment Group, LLC (property owner) requesting a Special Use Permit for a Drive-Thru Restaurant at the former Krystal restaurant location on the 0.775± acre property, zoned BG (General Business) District and located in the Towne Center Overlay District, 2484 E. Main Street, Snellville, Georgia (Tax Parcel 5026 240)
Mayor Pro Tem Emanuel made a motion to waive the first reading and place on the December 12, 2022 agenda, 2nd by Council Member Schulz; voted 6 in favor and 0 opposed, motion approved.

CONSENT AGENDA
None

OLD BUSINESS
None

NEW BUSINESS
Consideration and Action on Award of the Bid for the Park Maintenance Building [Bender]
City Manager Sanders spoke about the bidding process used for this project to save money on the building.
Council Member Lenski made a motion to award the bid for the Park Maintenance building to Diversified Construction of Georgia in the amount of $1,569,918, 2nd by Council Member Destang.
Mayor Bender spoke about the positive impact this project will have on the phase 3 of the Park Master Plan that is in progress.
The motion was voted 6 in favor and 0 opposed, motion approved.

1st Reading ORD 2022-~~19~~ 23- Consideration and Action on an Ordinance to Amend the Code of the City of Snellville, Georgia, to Provide for Regulation of Street Racing and Reckless Driving Exhibitions [Bender]

Mayor Bender explained the purpose of this ordinance is to give the ability to help stop street racing events on the public and private property.

Council Member Schulz made a motion to waive the first reading and place on the December 12, 2022 agenda, 2nd by Council Member Warner; voted 6 in favor and 0 opposed, motion approved.

COUNCIL REPORTS
Council Members Destang, Warner, Lenski, Schulz, and Mayor Pro Tem Emanuel each gave a report.

MAYOR'S REPORT
Mayor Bender gave a report.

PUBLIC COMMENTS
The following people spoke:
Gaye Bruce, 1710 Woodberry Run Drive, Snellville.
Mike Sabbagh, 1600 Summit View Way, Snellville.
Tricia Rawlins, 2088 Harbour Oaks Drive, Snellville.
Deborah Jones, 1657 Ramblewood Way, Snellville.
Kelly McAloon, 2916 Overwood Lane, Snellville.

EXECUTIVE SESSION
None

ADJOURNMENT
Mayor Pro Tem Emanuel made a motion to adjourn, 2nd by Council Member Destang; voted 6 in favor and 0 opposed, motion approved. The meeting adjourned at 9:31 p.m.

Barbara Bender, Mayor

Melisa Arnold, City Clerk

STATE OF GEORGIA

CITY OF SNELLVILLE

ORDINANCE NO. 2022-17

AN ORDINANCE TO AMEND THE OFFICIAL ZONING MAP OF THE CITY OF SNELLVILLE, GEORGIA, AS AMENDED, FOR A 2.765± ACRE TRACT OF LAND LOCATED IN LAND LOT 28 OF THE 5TH LAND DISTRICT, GWINNETT COUNTY, GEORGIA, 2706 LENORA CHURCH ROAD, SNELLVILLE, GEORGIA; TO ADD CONDITIONS AFFECTING THE PROPERTY; TO PROVIDE FOR SEVERABILITY; TO REPEAL CONFLICTING ORDINANCES; TO PROVIDE AN EFFECTIVE DATE; AND FOR OTHER PURPOSES.

PROPERTY OWNER:	Britt and Camp, LLC Snellville, Georgia 30078
LOCATION:	2706 Lenora Church Road Snellville, Georgia 30078
TAX PARCEL:	R5028 001
APPLICANT:	Lazaro Mota Mota's Construction, LLC Winder, Georgia 30680
CONTACT:	Tyler Lasser Alliance Engineering and Planning Alpharetta, Georgia 30009 770-225-4730 or TylerL@allianceco.com
DEVELOPMENT/PROJECT:	11-Lot Single-family (Detached) Residential Subdivision Development

WHEREAS, the governing authority of the City of Snellville, Georgia is the Mayor and Council thereof; and,

WHEREAS, the governing authority of the City of Snellville, Georgia desires to amend its official zoning map as it applies to the 2.765± acre tract of vacant land located

at 2706 Lenora Church Road, Snellville, Georgia (Tax Parcel 5028 001) for an 11-lot single-family (detached) residential subdivision development; and,

WHEREAS, the 2,765± acre tract of land is designated as Low-Density Residential on the Snellville 2040 Comprehensive Plan Future Land Use Map; and,

WHEREAS, the Low-Density Residential future land use category allows for single-family residential areas less than four (4) units per acre; and,

WHEREAS, the density for the eleven (11) single-family detached lots on the 2.765± acre tract of land is 3.978 units per acre, less than the 3.99 units per acre maximum allowed for single-family residential areas; and,

WHEREAS, the health, safety, and welfare of the citizens of Snellville, Georgia, will be positively impacted by the adoption of this Ordinance; therefore:

IT IS HEREBY ORDAINED BY THE GOVERNING AUTHORITY OF THE CITY OF SNELLVILLE, GEORGIA, and by the authority thereof:

Section 1. The Official Zoning Map for the City of Snellville, Georgia for the 2.765± acre tract of land described and shown on the boundary survey "Britt & Camp, LLC", sealed and dated 5-25-2022 (stamped received 8-29-2022) in Exhibit "A", a copy of which is attached hereto and incorporated herein by reference is hereby amended and changed from RS-30 (Single-family Residential) District to RS-5 (Single-family Residential) District, subject to the following enumerated conditions:

CONDITIONS:

1. The property shall be developed in accordance with the rezoning site plan entitled "Proposed Subdivision 2706 Lenora Church Road, Snellville, GA 30078", sealed and dated 8-15-2022 (stamped received 8-29-2022), with modifications permitted to meet conditions of zoning or State, County, and City regulations. Substantial variation from the rezoning site plan, as determined

by the Director of Planning and Development and City Manager will require Mayor and Council approval.

2. All dwelling driveways shall be a minimum of twenty-two feet (22') in length, measured from the front of the garage door to the leading edge of the sidewalk (edge closest to dwelling), and shall be wide enough to accommodate the parking of two vehicles.

3. A Property Owner's Association shall be established for the continuous maintenance of open space, stormwater detention facility, entrance signage and landscaping.

4. A minimum twenty (20) percent of the total site area must be conserved as open space and subject to the Open Space regulations of Sec. 401-2 Article 1 of Chapter 4 of the Snellville Unified Development Ordinance.

5. Subdivision entrance signage (if any) shall be located on Open Space.

6. Signs higher than 15 feet or larger than 225 square feet are prohibited.

7. A densely planted landscape buffer shall be provided between the stormwater detention facility and southern property boundary where adjacent to the Lenora Church Road public right of way as shown on the 8-15-2022 site plan.

8. Non-substantial variances, as determined by the Director of Planning and Development and City Manager for the design, development, or zoning requirements of the Snellville Unified Development Ordinance, must be submitted in writing for Administrative Variance approval consideration by the Director of Planning and Development.

9. All parcels shall be subject to a mandatory HOA. HOA must provide for Special Assessments to be imposed upon its members for capital expenditures, specifically including maintenance of any detention/retention/water quality structures/ponds.

10. HOA must enter into a maintenance agreement with the City that it is responsible for the maintenance and upkeep of any detention/retention/water quality structures/ponds. In the event that the HOA fails to repair such structure, the City will have the authority, but not the responsibility to make any necessary repairs and the HOA will reimburse the City for such expenditures. If the HOA does not have adequate funds on hand to reimburse the City, the HOA shall assess its members for the full amount of the repairs so as to reimburse the City.

Section 2. The changes in zoning classification are to be noted on the Official Zoning Map of the City of Snellville, Georgia as approved by the Mayor and Council as

soon as reasonably possible following the adoption of this Ordinance. The Official Zoning Map of the City of Snellville, Georgia, shall also be amended with an editorial note specifying the date these Snellville zoning amendments were approved by the Mayor and Council and specifying the parcels affected by this Ordinance. Until the changes are indicated on the Official Zoning Map of the City of Snellville, Georgia, as approved by the Mayor and Council, this Ordinance shall govern over Official Zoning Map of the City of Snellville, Georgia approved by the Mayor and Council to the extent of any discrepancy between this Ordinance and the Official Zoning Map of the City of Snellville, Georgia approved by the Mayor and Council.

Section 3. The preamble of this Ordinance shall be considered to be and is hereby incorporated by reference as if fully set out herein.

Section 4. (a) It is hereby declared to be the intention of the Mayor and Council that all sections, paragraphs, sentences, clauses and phrases of this Ordinance are or were, upon their enactment, believed by the Mayor and Council to be fully valid, enforceable and constitutional.

(b) It is hereby declared to be the intention of the Mayor and Council that, to the greatest extent allowed by law, each and every section, paragraph, sentence, clause or phrase of this Ordinance is severable from every other section, paragraph, sentence, clause or phrase of this Ordinance. It is hereby further declared to be the intention of the Mayor and Council that, to the greatest extent allowed by law, no section, paragraph, sentence, clause or phrase of this Ordinance is mutually dependent upon any other section, paragraph, sentence, clause or phrase of this Ordinance.

(c) In the event that any phrase, clause, sentence, paragraph or section of this Ordinance shall, for any reason whatsoever, be declared invalid, unconstitutional or otherwise unenforceable by the valid judgment or decree of any court of competent jurisdiction, it is the express intent of the Mayor and Council that such invalidity, unconstitutionality or unenforceability shall, to the greatest extent allowed by law, not render invalid, unconstitutional or otherwise unenforceable any of the remaining phrases, clauses, sentences, paragraphs or sections of the Ordinance and that, to the greatest extent allowed by law, all remaining phrases, clauses, sentences, paragraphs and sections of the Ordinance shall remain valid, constitutional, enforceable, and of full force and effect.

Section 5. Penalties in effect for violations of Chapter 1 of the Code of Ordinances, City of Snellville, Georgia at the time of the effective date of this Ordinance shall be and are hereby made applicable to this Ordinance and shall remain in full force and effect.

Section 6. All ordinances and parts of ordinances in conflict herewith are hereby expressly repealed

Section 7. This Ordinance was adopted on 11/28, 2022. The effective date of this Ordinance shall be the date of adoption unless otherwise stated herein.

[SIGNATURES BEGIN ON THE FOLLOWING PAGE]

ORDAINED this 28 day of November, 2022.

Barbara Bender, Mayor

Dave Emanuel, Mayor Pro Tem

ATTEST:

Melisa Arnold, City Clerk

Cristy Lenski, Council Member

Solange Destang, Council Member

APPROVED AS TO FORM:

W. Charles Ross, City Attorney
Powell & Edwards, P.C.

Gretchen Schulz, Council Member

Tod Warner, Council Member

EXHIBIT "A"

BOUNDARY SURVEY OF AN EXISTING TAX PARCEL

LAND LOT 28 OF THE 5TH LAND DISTRICT
CITY OF SNELLVILLE, GWINNETT COUNTY, GEORGIA
REFERENCE DEED: D.B. 14430 PG. 71
EXISTING TAX PARCEL: R5028 001

THIS BLOCK RESERVED FOR THE CLERK OF THE SUPERIOR COURT

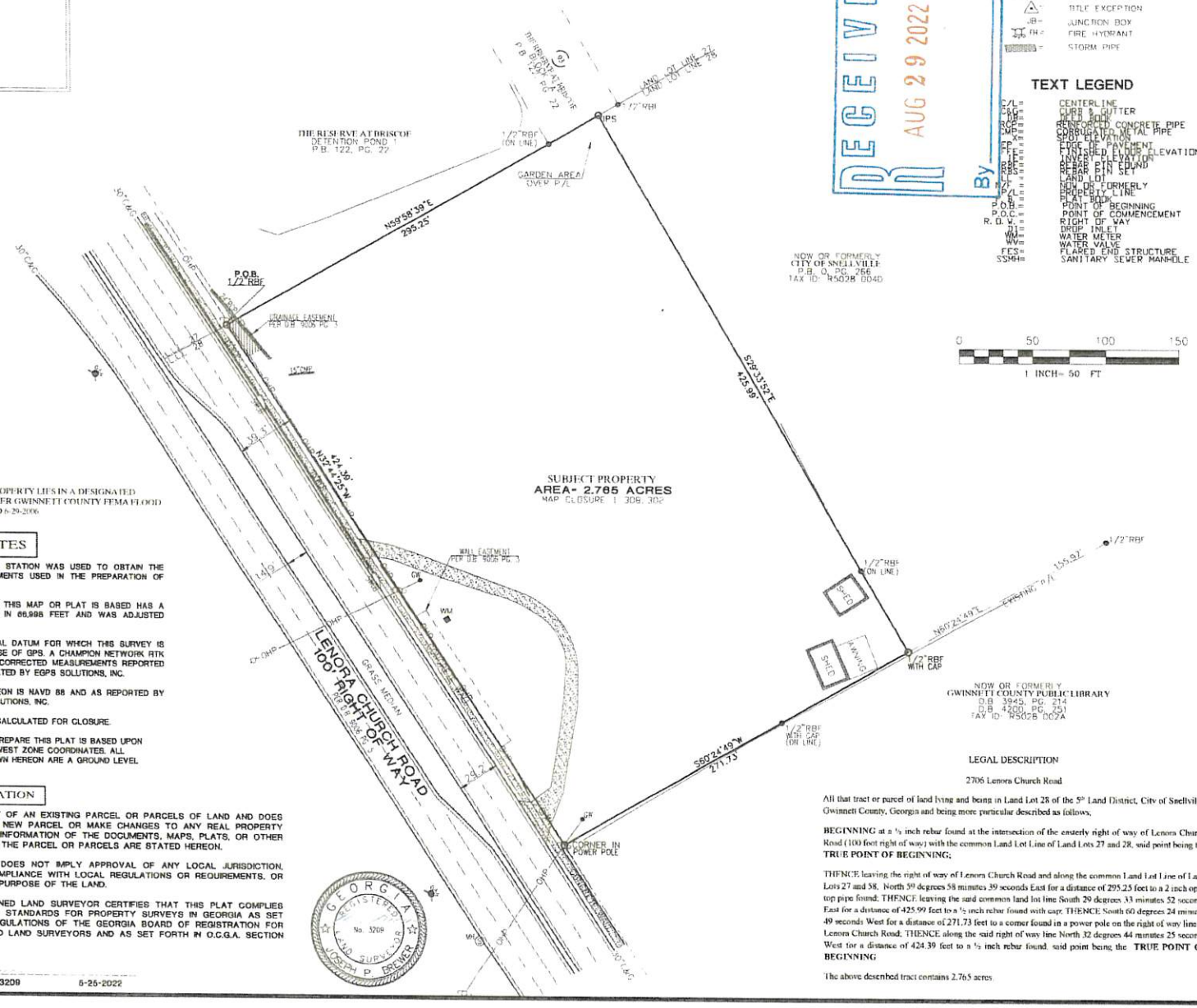

SYMBOL LEGEND

- LIGHT POLE
- POWER POLE
- TRAFFIC POLE
- SANITARY SEWER MANHOLE
- DWCB = DOUBLE WING CATCH BASIN
- SWCB = SINGLE WING CATCH BASIN
- TRAN = TRANSFORMER ELECTRIC
- FENCE LINE
- TITLE EXCEPTION
- JB = JUNCTION BOX
- FH = FIRE HYDRANT
- STORM PIPE

TEXT LEGEND

C/L =	CENTERLINE
C&G =	CURB & GUTTER
DB =	DEED BOOK
RCP =	REINFORCED CONCRETE PIPE
CMP =	CORRUGATED METAL PIPE
SE =	SPOT ELEVATION
EP =	EDGE OF PAVEMENT
FFE =	FINISHED FLOOR ELEVATION
IE =	INVERT ELEVATION
RBF =	REBAR PIN FOUND
RBS =	REBAR PIN SET
LL =	LAND LOT
N/F =	NOW OR FORMERLY
P/L =	PROPERTY LINE
PB =	PLAT BOOK
P.O.B. =	POINT OF BEGINNING
P.O.C. =	POINT OF COMMENCEMENT
R. O. W. =	RIGHT OF WAY
DI =	DROP INLET
WM =	WATER METER
WV =	WATER VALVE
FES =	FLARED END STRUCTURE
SSMH =	SANITARY SEWER MANHOLE

RECEIVED
AUG 29 2022
By

FLOOD NOTE

NO PORTION OF THE SUBJECT PROPERTY LIES IN A DESIGNATED SPECIAL FLOOD HAZARD AREA PER GWINNETT COUNTY FEMA FLOOD MAP NUMBER 13135C0138F, DATED 6-29-2006.

SURVEYOR'S NOTES

1. A LEICA TS12 ROBOTIC TOTAL STATION WAS USED TO OBTAIN THE LINEAR AND ANGULAR MEASUREMENTS USED IN THE PREPARATION OF THIS PLAT.

2. THE FIELD DATA UPON WHICH THIS MAP OR PLAT IS BASED HAS A CLOSURE PRECISION OF 1 FOOT IN 66,998 FEET AND WAS ADJUSTED USING LEAST SQUARES.

3. THE HORIZONTAL AND VERTICAL DATUM FOR WHICH THIS SURVEY IS BASED WAS OBTAINED BY THE USE OF GPS. A CHAMPION NETWORK RTK ROVER WAS USED TO COLLECT CORRECTED MEASUREMENTS REPORTED BY A REAL TIME NETWORK OPERATED BY EGPS SOLUTIONS, INC.

4. VERTICAL DATUM SHOWN HEREON IS NAVD 88 AND AS REPORTED BY THE RTN OPERATED BY EGPS SOLUTIONS, INC.

5. THIS MAP OR PLAT HAS BEEN CALCULATED FOR CLOSURE.

6. THE BEARING BASIS USED TO PREPARE THIS PLAT IS BASED UPON NAD-83, GEORGIA STATE PLANE, WEST ZONE COORDINATES. ALL DIRECTIONS AND DISTANCES SHOWN HEREON ARE A GROUND LEVEL PROJECTION OF THE SYSTEM.

SURVEYOR CERTIFICATION

THIS PLAT IS A RETRACEMENT OF AN EXISTING PARCEL OR PARCELS OF LAND AND DOES NOT SUBDIVIDE OR CREATE A NEW PARCEL OR MAKE CHANGES TO ANY REAL PROPERTY BOUNDARIES. THE RECORDING INFORMATION OF THE DOCUMENTS, MAPS, PLATS, OR OTHER INSTRUMENTS WHICH CREATED THE PARCEL OR PARCELS ARE STATED HEREON.

RECORDATION OF THIS PLAT DOES NOT IMPLY APPROVAL OF ANY LOCAL JURISDICTION, AVAILABILITY OF PERMITS, COMPLIANCE WITH LOCAL REGULATIONS OR REQUIREMENTS, OR SUITABILITY FOR ANY USE OR PURPOSE OF THE LAND.

FURTHERMORE, THE UNDERSIGNED LAND SURVEYOR CERTIFIES THAT THIS PLAT COMPLIES WITH THE MINIMUM TECHNICAL STANDARDS FOR PROPERTY SURVEYS IN GEORGIA AS SET FORTH IN THE RULES AND REGULATIONS OF THE GEORGIA BOARD OF REGISTRATION FOR PROFESSIONAL ENGINEERS AND LAND SURVEYORS AND AS SET FORTH IN O.C.G.A. SECTION 15-6-67.

GEORGIA REGISTERED No. 3209 LAND SURVEYOR JOSEPH P. BREWER

Joseph P. Brewer Ga. RLS #3209 5-25-2022

LEGAL DESCRIPTION

2706 Lenora Church Road

All that tract or parcel of land lying and being in Land Lot 28 of the 5th Land District, City of Snellville, Gwinnett County, Georgia and being more particular described as follows,

BEGINNING at a ½ inch rebar found at the intersection of the easterly right of way of Lenora Church Road (100 feet right of way) with the common Land Lot Line of Land Lots 27 and 28, said point being the **TRUE POINT OF BEGINNING;**

THENCE leaving the right of way of Lenora Church Road and along the common Land Lot Line of Land Lots 27 and 28, North 59 degrees 58 minutes 39 seconds East for a distance of 295.25 feet to a 2 inch open top pipe found; THENCE leaving the said common land lot line South 29 degrees 33 minutes 52 seconds East for a distance of 425.99 feet to a ½ inch rebar found with cap; THENCE South 60 degrees 24 minutes 49 seconds West for a distance of 271.73 feet to a corner found in a power pole on the right of way line of Lenora Church Road; THENCE along the said right of way line North 32 degrees 44 minutes 25 seconds West for a distance of 424.39 feet to a ½ inch rebar found, said point being the **TRUE POINT OF BEGINNING**

The above described tract contains 2.765 acres.

BOUNDARY SURVEY FOR:

BRITT & CAMP, LLC

NO	DATE	REVISION
1	12/9/20	added legal description as requested

SURVEY INFORMATION:
DATE: 5/25/2022 LAND LOT: 28 LAND DISTRICT: 5TH
COUNTY: GWINNETT CITY: SNELLVILLE DRAWN BY: BENNETT
JOB NUMBER: 19-187 SCALE: 1"=50' DATE OF FIELD WORK: 5/25/2022

PREPARED BY: A Georgia Land Surveying Firm: LSF# 001105

acre PROFESSIONAL SURVEYORS

ACRE GROUP, INC.
P.O. BOX 54 | LOGANVILLE | GEORGIA 30052 | 770.280.0080

SHEET 1 OF 1

EXHIBIT "B"

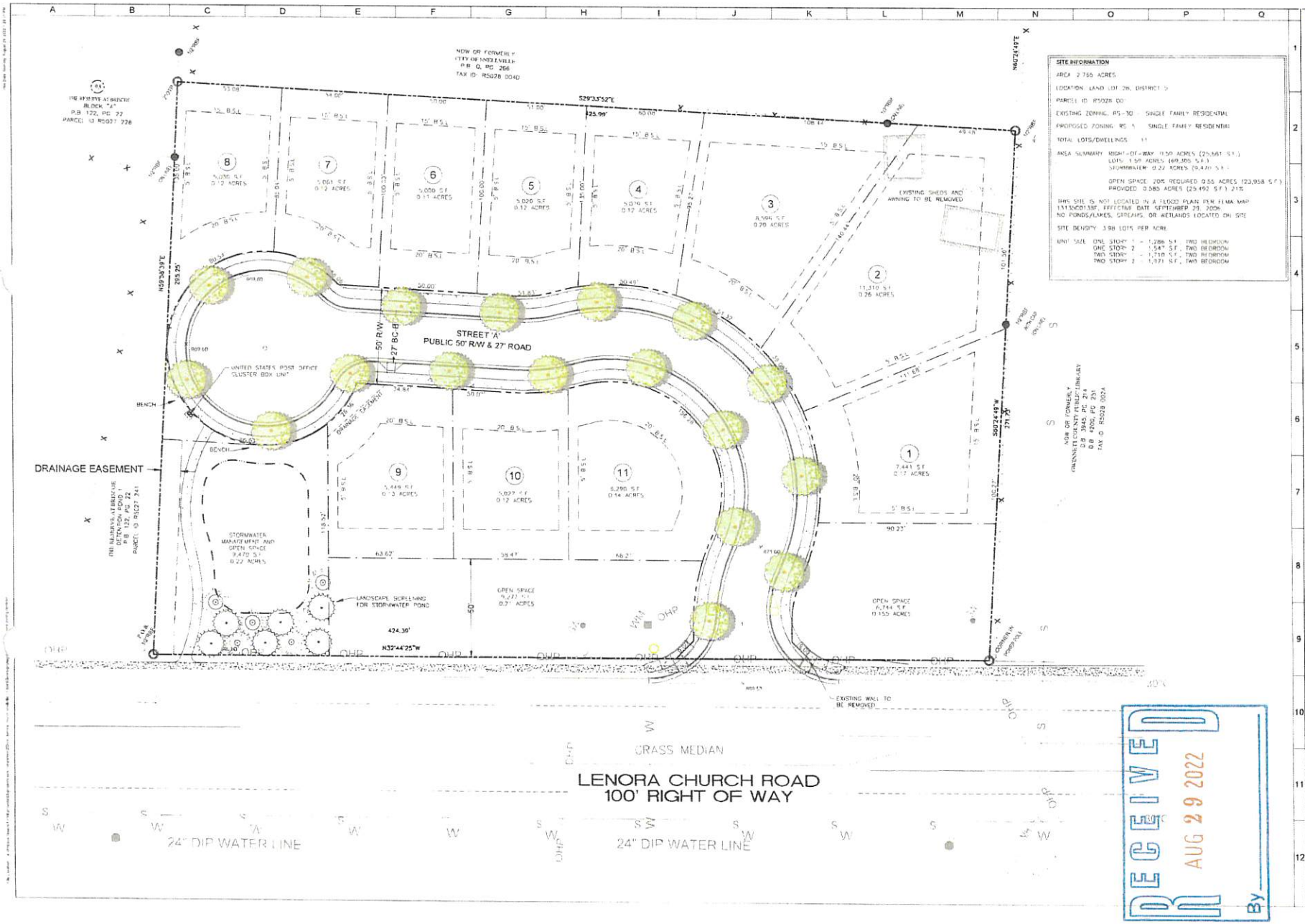

ALLIANCE

BRITT AND CAMP, LLC.
P.O. BOX 550
SNELLVILLE GA. 30078

Rezoning Plan for
Lenora Church Tract
2766 LENORA CHURCH ROAD
SNELLVILLE GA. 30078

Orig. Issue
Designed by
Checked by
Project #

NORTH

ZONING PLAN

8.15.22

CITY OF SNELLVILLE

STATE OF GEORGIA

ORDINANCE NO. UDO 22-02

AN ORDINANCE TO AMEND PORTIONS OF CHAPTER 200 OF THE UNIFIED DEVELOPMENT ORDINANCE FOR THE CITY OF SNELLVILLE, GEORGIA, TO REPEAL CONFLICTING ORDINANCES, AND FOR OTHER PURPOSES

WHEREAS, the Mayor and the Council of the City of Snellville, Georgia, the governing body of the City of Snellville, Georgia, desire to amend Article 7 (Signs) of Chapter 200 of the Unified Development Ordinance for the City of Snellville, Georgia;

WHEREAS, the Mayor and the Council of the City of Snellville, Georgia is authorized by O.C.G.A. § 36-35-3 to adopt ordinances relating to its property, affairs and local government; and

WHEREAS, the Mayor and Council of the City of Snellville, Georgia deem such amendment to be for the betterment and general welfare of the City of Snellville and its inhabitants; and

WHEREAS, due notice to the public was published in the Gwinnett Daily Post, the legal organ for Gwinnett County and the City of Snellville, Georgia on October 26, 2022 giving notice of the November 15, 2022 Planning Commission specially called public hearing and second notice published on November 9, 2022 giving notice of the November 28, 2022 Mayor and Council regular meeting and public hearing; and

WHEREAS, the Planning Commission of the City of Snellville, Georgia considered the proposed amendments at a duly advertised specially called meeting and public hearing on November 15, 2022 at 7:30 p.m. and by a unanimous vote of five (5) to zero (0), the Planning Commission recommends approval of the proposed amendments; and,

WHEREAS, the Mayor and Council of the City of Snellville, Georgia deem such amendment to be for the betterment and general welfare of the City of Snellville and its inhabitants; and,

IT IS HEREBY ORDAINED BY THE GOVERNING AUTHORITY OF THE CITY OF SNELLVILLE, GEORGIA, and by the authority thereof:

Section 1. Chapter 200, Article 7 of the Unified Development Ordinance for the City of Snellville, Georgia is hereby amended as follows:

<u>Section 207-6.2. Definitions</u>, is hereby amended by deleting the existing definition and inserting in its place the following language:

<u>Sign, menu board</u>. A freestanding sign oriented to the drive-through lane for a restaurant that advertises the menu items available from the drive-through window.

<u>Section 207-6.3. Signs Prohibited,</u> is hereby amended by deleting the existing section and inserting in its place the following language:

<u>207-6.3. Signs Prohibited</u>

A. Prohibited Signs

The following types of signs are prohibited in all zoning districts:

1. Animated sign;
2. Flashing sign;
3. Roof sign;
4. Signs attached to any street sign or marker, traffic control sign or device, or attached to or painted on any pole, post, tree, rock, shrub, plant or other natural object or feature;
5. Signs which contain flashing lights or are in imitation of an official traffic or construction sign;
6. Any sign placed or erected on a property without the permission of the property owner;
7. Signs placed within the public right-of-way, except publicly owned, authorized or maintained signs which serve an official public purpose;
8. Mobile sign;
9. Bench sign;
10. Air and gas filled device sign;
11. Beacon sign;
12. Open face channel letter construction;
13. Attention getting device;
14. Swinging or rotating sign except as provided Sec. 207-6.5 (Signs Exempt);
15. Freestanding signs larger than 6 square feet in sign area;
16. Ground signs over 15 feet in height;
17. Building wraps as defined in Sec.207-6.2, unless they receive a special use permit or approved master signage plan;
18. Murals as defined in Sec.207-6.2, unless they receive a special use permit or approved master signage plan;
19. Spinsock;
20. Windsock;
21. Signs attached to a retaining wall;
22. Signs associated with a customary home occupation, as defined in Sec. 206-8.12.;
23. Signs which contain words, pictures, or statements which are obscene, as defined by applicable case and statutory law;
24. Signs which interfere with road or highway visibility or obstruct or otherwise interfere with the safe and orderly movement of traffic or which otherwise pose a hazard to traffic due to structural deficiencies in the structure of such sign;

25. Signs which advertise any activity, service, or product prohibited by the laws or regulations of the United States or the State of Georgia or by the ordinances or resolutions of the City. This section shall not prohibit signs promoting the legalization of any matter presently prohibited by federal, state, or local law;
26. Signs which obstruct any fire escape, any means of egress or ventilation or shall prevent free passage from one part of a roof to any other part thereof, as well as signs attached to any fire escape;
27. Signs which do not conform to applicable building and electrical codes;
28. Signs which are in violation of the rules and regulations of any zoning overlay district presently existing or as may later be enacted;
29. Signs (including sign structures) related to a business, service or commercial transaction that has been discontinued for 6 months or more;
30. Signs that are structurally unsound, or are a hazard to traffic or pedestrians; and,
31. Signs (including sign structure) that do not present a neat and orderly appearance, which may be manifested by the following: rust or holes on or in the sign or sign structure, or broken, missing, loose or bent parts, faded or flaking paint, non-operative or partially non-operative illuminating or mechanical devices or missing letters in sign copy.

Section 207-6.4. Signs Permitted, is hereby amended by deleting the existing section 207-6.4.A and inserting in its place the following language:

207-6.4.A. Signs Permitted

A. Residential Districts

Signs permitted and regulated in residential zoning districts include:

Section 207-6.4. Signs Permitted, is hereby amended by deleting the existing section 207-6.4.A.2 and 207-6.4.A.3 and inserting in its place the following language:

207-6.4.A Residential Districts

2. Monument signs no greater than thirty-two (32) square feet, excluding the monument base, decorative columns and supporting structure at the entrance to a subdivision.
3. Freestanding sign required by the Georgia Department of Community Health for state licensed Personal Care Home, Community Living Arrangement, or Group Home, one (1) sign per road frontage, not to exceed six (6) square feet in sign area, not to exceed three (3) feet in height including sign support post(s) and generally located at or near the driveway. Sign must meet the setback requirements of Sec. 207-6.6.A.

Section 207-6.4. Signs Permitted, is hereby amended by deleting the existing section 207-6.4.B and inserting in its place the following language:

207-6.4. Signs Permitted

B. Nonresidential and Mixed-Use Districts

Signs permitted and regulated in the nonresidential and mixed-use districts, and approved special uses in residential districts and places of worship as an approved special use include:

<u>Section 207-6.4. Signs Permitted,</u> is hereby amended by deleting the existing section 207-6.4.B.5 and inserting in its place the following language:

5. Monument signs as defined in Sec. 207-6.2. and regulated as follows:
   a. Monument sign area is defined as the entire area within a continuous perimeter, enclosing the extreme limits of the sign structure (overall height by overall width), not to include the first twenty-four (24) inches of the base height of a monument sign.
   b. One (1) monument sign is allowed per public road frontage.
   c. The maximum square footage of the sign is based upon one-half (0.50) square feet per one (1) foot of road frontage or sixty-four (64) square feet, whichever is larger.
   d. In lieu of allowing a second monument sign, corner lots with two (2) adjacent public road frontages may utilize thirty (30) percent of the allowable sign area from the second public road frontage for the sign area calculation of the monument sign, subject to the maximum sign area of subsection (e). Sign area variances of Sec. 207-6.6.C. are not allowed. Sign placement shall comply with Sec. 201-1.8. (Intersection Visibility).
   e. The maximum sign area allowed is two-hundred-twenty-five (225) square feet.
   f. Signs greater than five (5) feet high must be set back at last ten (10) feet from the right-of-way. Signs greater than ten (10) feet high must be set back at least fifteen (15) feet from the public right-of-way.
   g. Monument base must be constructed of natural unpainted brick or natural unpainted stone; or true hard coat stucco painted or stained using hues from or equivalent to any historic palettes from any major paint manufacturer, except that primary and fluorescent colors are prohibited. Faux stone, faux brick, or foam core monument base signs are prohibited.
   h. Monument base shall be at least as wide as the sign and/or frame upon it and a minimum of two (2) feet in height above the highest adjacent grade. No support posts may be exposed.
   i. Electrical service to be provided by underground service only. Electrical disconnect and/or meter base must not be visible from the public right-of-way. Solar powered lighting is prohibited.
   j. Monument sign must include the numeric street address of the property upon which it is located. The numbers used to identify the address may be no less than five (5) inches in height and no more than nine (9) inches in height.

<u>Section 207-6.4. Signs Permitted,</u> is hereby amended by deleting the existing section 207-6.4.B.6 and inserting in its place the following language:

6. Signs for convenience stores, automotive service stations and other locations providing vehicle fueling with fuel pump islands: Spreader bars (signs located under canopy over pump islands) are limited to no more than two (2) signs per spreader bar, not to exceed four (4) square feet per sign. Fuel pump signage not to exceed six (6) square feet per side.

<u>Section 207-6.4. Signs Permitted,</u> is hereby amended by deleting the existing section 207-6.4.B.14 and 207-6.4.B.15 and inserting in its place the following language:

14. Interior project directional sign(s) are authorized in all developments or planned subdivisions of land within any nonresidential, mixed-use districts, approved special uses in residential districts and places of worship as an approved special use subject to the following:
    a. May not be located within one-hundred (100) feet of an entrance to a project.
    b. Maximum sign area of each sign may not exceed sixteen (16) square feet.
    c. Maximum sign height shall not exceed six (6) feet above grade.
    d. Only one (1) sign may be located at each internal intersection of private driveway or public streets within the project.
15. Electric Vehicle (EV) Charging Station signage may not exceed eighteen (18) square feet in total area per side per station and may be an element of an electronic message board sign, subject to the requirements of Sec. 207-6.B (Electronic Message Boards). The maximum sign height may not exceed ten (10) feet above grade and setback a minimum of ten (10) feet from the right-of-way.

<u>Section 207-6.4. Signs Permitted,</u> is hereby amended by adding the following language:

B. Nonresidential and Mixed-Use Districts

16. Signs per an approved Sign Plan in Sec. 207-6.12. (Sign Plan Required in TC-MU (Towne Center Mixed Use) District).

<u>Section 207-6.5. Signs Exempt,</u> is hereby amended by deleting the existing section and inserting in its place the following language:

<u>207-6.5.A. Signs Exempt</u>

A. The following types of signs are exempt from the requirements of this section unless otherwise expressly prohibited by Sec. 207-6.3. (Signs Prohibited). These signs must meet the height and setback requirements of this section. No permit is required. Signs that are constructed of degradable material may be posted for a maximum period of ninety (90) calendar days. Nothing will prevent such a sign from being replaced by an identical sign:
    1. Signs not visible from public thoroughfares or intended to be seen by the traveling public.
    2. Signs within a business, office, mall, or totally enclosed area.
    3. Signs erected by, or on the order of, a public official in the performance of their duty, may be located within the public right-of-way.

4. Portable signs that are a maximum of six (6) square feet in area, only one (1) per storefront. Portable signs must be located near the building entry on the sidewalk. Portable signs are not allowed in parking areas, streets or public rights-of-way and may not impede the flow of pedestrian traffic.
5. Flags, no more than three (3) poles, neither in excess of sixty (60) square feet, nor greater than forty (40) feet in height per property. The flags must be no further from the structure than fifty (50) percent of the distance from the face of the structure to the public right-of-way.
6. Temporary sign(s). There may be no more than eight (8) temporary signs on display at any one time. The cumulative total of all temporary signs may be no greater than thirty-two (32) square feet per property. Temporary signs may not exceed six (6) feet in height above grade and must be located out of right-of-way or at least ten (10) feet from the back of the curb or edge of the pavement of the adjacent street, whichever is greater.
7. Sign spinners, wavers, costumed characters or street performers with signage devices are prohibited within the public right-of-way. Any persons involved in this activity must remain on private property in a hard surface paved area, away from entry and exit drives.
8. Swinging or projecting signs not exceeding five (5) square feet or projecting more than four (4) feet and attached under the eave or awning of a building above a business entrance.
9. One official sign as required by the State of Georgia for vehicle emissions stations licensed by the State. One (1) sign per public right-of-way frontage. Sign shall meet the setback requirements of Sec. 207-6.6.A. and may not exceed 24 inches wide by 36 inches high with standard frame and hardware.
10. Vehicle sign/wrap shall be allowed when the vehicle is legally parked in the rear or to the side of an establishment or when vehicle cannot legally park in the rear or side of the establishment, may park in a parking area that is farthest away from the public street right-of-way. Vehicles must be operational at all times and must not remain stationary for more than 72 hours.
11. Signage affixed to an automated teller kiosk and accompanying canopy if serving as an accessory use to a bank or financial institution on the same lot.
12. Signage on vending machines, limited to four (4) per lot, and which are not located more than five (5) feet from the building foundation and wall, and within the required front yard setback of the zoning district.
13. Freestanding sign required by the Georgia Department of Community Health for state licensed Personal Care Home, Community Living Arrangement, or Group Home.

<u>Section 207-6.6. General Requirements,</u> is hereby amended by deleting the existing section and inserting in its place the following language:

<u>207-6.6. General Requirements</u>
In addition to the requirements of Sec. 207-6.3. (Signs Prohibited), Sec. 207-6.4. 207-6.4 (Signs Permitted), and Sec. 207-6.5. (Signs Exempt), the following regulations also apply:

A. Setbacks
Signs may not be located in the right-of-way and must be at least 10 feet from the back of the curb or edge of the pavement of the adjacent street, whichever is greater. Signs on a corner lot located at the intersection of two streets must be located outside of the sight distance triangle, measured 30 feet from the intersecting lines of the street right-of-way or at least 15 feet from the back of the curb or edge of pavement of the adjacent streets, whichever is greater.

B. Multiple Signs
No business is allowed to install an additional conforming sign until it has removed all existing nonconforming signs. Provided, however, that on lots with three or more businesses, at least two of which are party to a lease or leases, any business that does not own or control the nonconforming sign may erect a wall sign.

C. Administrative Variances
1. Setback dimensions of monument and freestanding signs can be adjusted up to a maximum of 5 feet. The Director has the discretion to use administrative variance only when necessary to prevent a visual hazard from occurring with the placement of signs.
2. The Director has the discretion to allow administrative variances in sign area allowances for wall signs. Under no circumstances may the administrative variance allow the proposed wall sign to be more than 125% of the base regulation sign size.

D. Street Numbers
Monument signs must include the numeric street address of the property upon which it is located. The numbers used to identify the address may be no less than 5 inches in height and no more than 9 inches in height.

E. Illumination
Excluding electronic message board signs, internally illuminated signs may not exceed 20 foot-candles at a distance of 10 feet from such structure. Externally illuminated signs must be lighted so that lights are positioned in such a manner that light does not produce glare nor does it shine into the eyes of motorists or pedestrians so as to create a hazardous or dangerous condition. Externally illuminated signs must have lights with directional cut offs which do not allow the light source to be seen by passersby. All fixtures must be ground-mounted. No more than two fixtures per side. No more than 2% of light may go above horizontal.

<u>Section 207-6.7. Banners,</u> is hereby amended by deleting the existing section and inserting in its place the following language:

<u>207-6.7. Banners</u>

Banners are permitted in nonresidential and mixed-use districts and special uses in residential districts subject to the approval of a banner permit issued by the Director and subject to the following criteria:

A. Banners and/or feather flags not in excess of 32 square feet in area (cumulative) to be attached to the building facade or to a permanent sign or placed in the ground, must be located out of right-of-way or at least 10 feet from the back of the curb or edge of pavement of the adjacent street, whichever is greater.
B. A banner permit may be issued for each occurrence not to exceed two, 14-day periods and one, 21-day period per calendar year per establishment.
C. Feather flags are limited to one flag per business and must be located out of right-of-way or at least 10 feet from the back of the curb or edge of the pavement of the adjacent street, whichever is greater. Feather flags are permitted for no more than two, 14-day periods and one, 21-day period each calendar year.

Section 207-6.8. Electronic Message Boards, is hereby amended by deleting the existing section and inserting in its place the following language:

207-6.8. Electronic Message Boards

A. Permitted Districts
   1. Electronic messaging signs are permitted in the following zoning districts:
      a. CI - Civic Institutional district.
      b. OP – Office Professional district.
      c. BG – General Business district.
      d. HSB – Highway Service Business district.
      e. LM – Light Manufacturing district.
      f. MU – Mixed Use district.
      g. TC-MU - Towne Center Mixed Use district.
   2. Electronic messaging signs are allowed with an approved special use permit in the following districts:
      a. NR – North Road district.
      b. TC-R – Towne Center Residential district.
   3. Electronic messaging signs are allowed in the RS-30 (Single-family Residential) zoning district for any place of worship operating with an approved special use permit or conditional use permit.

B. Sign Types to Utilize Electronic Message Boards
   Electronic messaging may be an element of a monument, freestanding, fuel pump canopy, menu board, pre-menu board or window/door sign. Wall signs may not contain electronic messaging.

C. Size and Location Requirements
   Electronic message boards must meet the size and placement requirements of this subsection.
   1. Maximum allowable electronic message board sign area as an element of:

a. Monument sign: Fifty (50) percent of the monument sign area in Sec. 207-6.4.B.5. (Monument Sign).
b. Menu board/pre-menu board: One-Hundred (100) percent of allowable sign area in Sec. 207-6.4.B.12. (Menu Board Sign) and 207-6.4.B.13. (Pre-menu Board Sign).
c. Fuel pump canopy: One-Hundred (100) percent of allowable sign area in Sec. 207-6.4.B.6. (Fuel Pump Islands).
d. Window/door: One-Hundred (100) percent of allowable sign area in Sec. 207-6.4.B.3. (Window and Door Signs) for one (1) window/door. Only one (1) window/door electronic message board sign allowed per location. No electronic message board window/door sign may exceed fifteen (15) square feet in total display area.
e. Freestanding sign: One-Hundred (100) percent of allowable sign area in Sec. 207-6.4.B.7. (Freestanding Sign).
f. Electric Vehicle (EV) Charging Station: One-Hundred (100) percent of allowable sign area in Sec. 207-6.4.B.15. (EV Charging Station).

2. Sign area variances of Sec. 207-6.6.C. are not allowed and may only be considered by the Board of Appeals.

D. Duration of Display
1. Any electronic message displayed shall remain unchanged for a minimum of 10 seconds before switching messages.
2. The following display types are prohibited:
   a. Animation is prohibited;
   b. Flashing, blinking, fade in, fade out or scrolling text is prohibited; and
   c. Video images are prohibited.

E. Intensity of Light
1. The maximum luminance produced by the sign may not exceed three-tenths (3/10) foot-candles greater than the ambient light level.
2. The light level produced by the sign is measured using the following equation based on typical sign-to-viewer distance: the square root of the product of the sign area and 100. Example using a 12 square foot sign:

$$\sqrt{(12 \times 100)} = 34.6 \text{ ft. measuring distance}$$

3. Automatic dimming capability must adjust the sign's illumination to the ambient light at all times of the day or night.

F. Default Control
1. The sign must be equipped to freeze the display in one position if a malfunction occurs.
2. The sign must also be equipped with a means to immediately discontinue the display if it malfunctions.

3. The sign owner must immediately stop the display when notified by the Director that the sign is not complying with the standards of this section.

<u>Section 207-6.9. General Procedures,</u> is hereby amended by deleting the existing Section 207-6.9.A. and inserting in its place the following language:

<u>207-6.9. General Procedures</u>
The following procedures must be followed by all persons erecting signs:
A. Conformance and Permits

All signs erected, replaced, modified or relocated must be in conformance with all ordinances and codes of the City. A sign permit must be secured from the Director. This permit must be issued before installation or modification of any sign. No permit is required for any change in the lettering, text or graphics displayed on a display board, provided no modification is made to the size or location of the sign. No permit is required for those signs exempt under Sec.207-6.5. (Signs Exempt). The discretion of any City official reviewing a sign permit application is to determine if the application and the proposed sign are in compliance with this section. No official reviewing a sign permit application or building or electrical permit application for a proposed sign may consider the content of any message on a proposed sign.

<u>Section 207-6.9. General Procedures,</u> is hereby amended by deleting the existing Sction 207-6.9.A.2. and inserting in its place the following language:

2. Signs that require design by a Georgia registered professional engineer:
   a. Signs that exceed 50 square feet in area, inclusive of the sign support structure and/or monument base, that are either monument signs or signs with supporting structures.
   b. Signs that exceed 12 feet in height above grade.

<u>Section 207-6.9. General Procedures,</u> is hereby amended by deleting the existing Section 207-6.9.A.5. and inserting in its place the following language:

5. Structural drawing(s) plan review requirements:
   a. Drawings for each sign structure must clearly specify the required materials, sizes, and locations for all structural components. Complete details must be provided that clearly indicates the required connections between all structural components including anchorage to the foundation. Details shall also indicate required attachments of sign cabinets to the supporting structure.
   b. Sign foundation requirements must be clearly indicated on the drawings including, but not limited to, footing size and reinforcement, 28-day compressive strength of concrete, anchor bolt size and embedment depth.
   c. Drawings for signs that require design by a Georgia registered professional engineer must contain the following minimum design data in addition to the information required in sentences (a) and (b) immediately above:

i. State on drawings that the design complies with the International Building Code;
ii. State on drawings that the wind load design complies with ASCE 7 (minimum design loads for buildings and other structures);
iii. Basic wind speed (mph), design wind pressure (PSF), exposure category (B or C);
iv. Minimum required soil bearing capacity (PSF);
v. Structural material specifications (including but not limited to ASTM designation, yield strength (SKI), and material grade, if applicable).

Section 207-6.9. General Procedures, is hereby amended by deleting the existing Sction 207-6.9.C. and inserting in its place the following language:

C. Expiration Date
A sign permit becomes null and void if the sign for which the permit was issued has not been completed within 6 months after the date of approval.

Section 207-6.10. Nonconforming Signs, is hereby amended by deleting the existing Section 207-6.10.B.2. and inserting in its place the following language:

207-6.10. Nonconforming Signs
B. Billboard Conversion and Reduction
2. Exchange Ratio and Permitting
Notwithstanding any other provision of Sec. 207-6. (Signs), any eligible conversion structure may be modified to an electronic billboard, provided that the applicant removes from within the City of Snellville an equal number of removal structures and billboard sign faces to be converted. In order to be eligible for use as a removal structure, the entirety of the above-ground portion of the removal structure must be removed. The applicant is entitled to obtain a permit, upon proper application, for the conversion of a conversion structure to an electronic billboard, which permit must provide that the conversion structure may not converted to an electronic billboard until the removal structure has been fully removed. Each permit will grant the applicant a period of not less than 1 year to complete conversion of the conversion structure after removal of the removal structure.

Section 207-6.12. Sign Plan Required in TC-MU (Towne Center Mixed-Use District), is hereby amended by inserting the following new language:

207-6.12. Sign Plan Required in TC-MU (Towne Center Mixed-Use District)

A. Purpose and Intent
The purpose of this Section is to allow for consistent signage throughout a qualifying development. It is the intent of the City of Snellville that this Section will only apply to and affect qualifying properties located within the Towne Center Mixed Use District.

B. Qualifying Property
This Section shall apply to developments of 10 acres or more that are zoned Towne Center Mixed Use (TC-MU).

C. Process
1. All Qualifying Properties under this section shall submit a Signage Plan to be approved by the Mayor and Council. This Signage Plan shall include:
   a. Street address of the property upon which the sign is to be located. In the absence of a street address, an acceptable alternative method of location may be used.
   b. Type of sign as defined in this Article.
   c. Plans indicating the dimensions of the sign, sign area, height, and mounting details.
   d. Plans indicating its location on the property or the face of the building including the road frontage or building elevation
   e. The name(s) and address(es) of the real property upon which the subject sign is to be located.
   f. Written consent of the owner, or their agent, granting permission for the placement and/or maintenance of the subject sign.
   g. The name, address, phone number and business license number of the sign contractor.
   h. Indicate any signage which would otherwise require a variance under this Article. Upon submission of the Signage Plan, the applicant shall not have to submit a separate request for a variance under this Article.

2. The Planning and Development Department will review the plan for completeness. If complete, the Department will forward the plan to Planning Commission for a public hearing and recommendation. The recommendation from Planning Commission will then be forwarded to Mayor and Council for public hearing and final decision.
3. If approved, the applicant will pay all necessary sign permit fees in accordance with the Fee Schedule prior to work beginning on the signs.

Section 2. (a) It is hereby declared to be the intention of the Mayor and Council that all sections, paragraphs, sentences, clauses and phrases of this Ordinance are or were, upon their enactment, believed by the Mayor and Council to be fully valid, enforceable and constitutional.

(b) It is hereby declared to be the intention of the Mayor and Council that, to the greatest extent allowed by law, each and every section, paragraph, sentence, clause or phrase of this Ordinance is severable from every other section, paragraph, sentence, clause or phrase of this Ordinance. It is hereby further declared to be the intention of the Mayor and Council that, to the greatest extent allowed by law, no section, paragraph, sentence, clause or phrase of this Ordinance is mutually dependent upon any other section, paragraph, sentence, clause or phrase of this Ordinance.

(c) In the event that any phrase, clause, sentence, paragraph or section of this Ordinance shall, for any reason whatsoever, be declared invalid, unconstitutional or otherwise unenforceable by the valid judgment or decree of any court of competent jurisdiction, it is the express intent of the Mayor and Council that such invalidity, unconstitutionality or unenforceability shall, to the greatest extent allowed by law, not render invalid, unconstitutional or otherwise unenforceable any of the remaining phrases, clauses, sentences, paragraphs or sections of the Ordinance and that, to the greatest extent allowed by law, all remaining phrases, clauses, sentences, paragraphs and sections of the Ordinance shall remain valid, constitutional, enforceable, and of full force and effect.

Section 3. All ordinances and parts of ordinances in conflict herewith are hereby expressly repealed.

Section 4. This Ordinance was adopted 11/28, 2022. The effective date of this Ordinance shall be the date of adoption unless otherwise stated herein.

[SIGNATURES APPEAR ON THE FOLLOWING PAGE]

ORDAINED this 28 day of November, 2022.

Barbara Bender, Mayor

Dave Emanuel, Mayor Pro Tem

ATTEST:

Melisa Arnold, City Clerk

Solange Destang, Council Member

Cristy Lenski, Council Member

APPROVED AS TO FORM:

W. Charles Ross, City Attorney
Powell & Edwards, P.C.

Gretchen Schulz, Council Member

Tod Warner, Council Member

STATE OF GEORGIA

CITY OF SNELLVILLE

ORDINANCE NO. 2022-18

AN ORDINANCE TO AMEND THE OFFICIAL ZONING MAP OF THE CITY OF SNELLVILLE, GEORGIA, AS AMENDED, FOR A 10.0910± ACRE TRACT OF LAND LOCATED IN LAND LOTS 26 AND 39 OF THE 5TH LAND DISTRICT, GWINNETT COUNTY, GEORGIA; TO APPROVE A MASTER SIGNAGE PLAN; TO ADD CONDITIONS AFFECTING THE PROPERTY; TO PROVIDE FOR SEVERABILITY; TO REPEAL CONFLICTING ORDINANCES; TO PROVIDE AN EFFECTIVE DATE; AND FOR OTHER PURPOSES.

CASE NUMBER:	#MSP 22-01
PROPERTY OWNERS:	Snellville Towne Center, LLC Columbus, Ohio 43215-5088 Downtown Development Authority of the City of Snellville, Georgia Snellville, Georgia 30078 Gwinnett County Georgia (Library) Lawrenceville, Georgia 30046
LOCATION:	10.091± Acres at the intersection of Clower Street, Oak Road, North Road, and Wisteria Drive, Snellville, Georgia
TAX PARCELS:	R5026 209, 227, 256, 258, 275, 326; and R5039 013, 014, 036, 063, 190, 191, 208, 275, 279, and 281
DEVELOPMENT/PROJECT:	The Grove at Towne Center (Phase 1) A Master Planned Mixed-Use Development

WHEREAS, the governing authority of the City of Snellville, Georgia is the Mayor and Council thereof; and

WHERAS, the governing authority of the City of Snellville, Georgia approved the amendment to Sec 207-6 (Signs) of Article 7 of Chapter 200 of the Unified Development

Ordinance for the City of Snellville, Georgia, adding Sec. 207-6.12. (Sign Plan Required in TC-MU (Towne Center Mixed-Use District) allowing the Mayor and Council to consider for approval a master signage plan for qualifying developments of ten (10) acres or more that are zoned TC-MU (Towne Center Mixed Use) District; and

WHEREAS, the subject property is a qualifying development consisting of a 10.091± acre tract of land located at the intersections of Clower Street, Oak Road, North Road, and Wisteria Drive, Snellville, Georgia, and is zoned TC-MU District, and known as The Grove at Towne Center (Phase1); and

WHEREAS, the governing authority of the City of Snellville, Georgia desires to amend its official zoning map as it applies to the 10.091± acre tract of land as shown on Sheet 3/3 of the final plat in Exhibit "A", a copy of which is attached hereto and incorporated herein by reference, and approve the master signage plan for The Grove at Towne Center (Phase 1), a master planned mixed-use development; and,

WHEREAS, the health, safety, and welfare of the citizens of Snellville, Georgia, will be positively impacted by the adoption of this Ordinance; therefore:

IT IS HEREBY ORDAINED BY THE GOVERNING AUTHORITY OF THE CITY OF SNELLVILLE, GEORGIA, and by the authority thereof:

Section 1. For reasons stated in the public hearing and recommendations of the Planning Department and Planning Commission, the master signage plan entitled "The Grove at Towne Center Comprehensive Sign Plan, Snellville, GA", dated March 14, 2022 and containing pages 1-21 in Exhibit "B", a copy of which is attached hereto and incorporated herein by reference, is hereby approved subject to the following enumerated conditions:

CONDITIONS:

1. Building mounted signs and/or ground project signage shall require an approved sign permit and building permit, as applicable, from the City of Snellville prior to the installation of signage.

Section 2. The preamble of this Ordinance shall be considered to be and is hereby incorporated by reference as if fully set forth herein.

Section 3. The changes in zoning classification is to be noted on the Official Zoning Map of the City of Snellville, Georgia as approved by the Mayor and Council as soon as reasonably possible following the adoption of this Ordinance. The Official Zoning Map of the City of Snellville, Georgia, shall also be amended with an editorial note specifying the date these Snellville zoning amendments were approved by the Mayor and Council and specifying the parcels affected by this Ordinance. Until the changes are indicated on the Official Zoning Map of the City of Snellville, Georgia, as approved by the Mayor and Council, this Ordinance shall govern over Official Zoning Map of the City of Snellville, Georgia approved by the Mayor and Council to the extent of any discrepancy between this Ordinance and the Official Zoning Map of the City of Snellville, Georgia approved by the Mayor and Council.

Section 4. (a) It is hereby declared to be the intention of the Mayor and Council that all sections, paragraphs, sentences, clauses and phrases of this Ordinance are or were, upon their enactment, believed by the Mayor and Council to be fully valid, enforceable and constitutional.

(b) It is hereby declared to be the intention of the Mayor and Council that, to the greatest extent allowed by law, each and every section, paragraph, sentence, clause or

phrase of this Ordinance is severable from every other section, paragraph, sentence, clause or phrase of this Ordinance. It is hereby further declared to be the intention of the Mayor and Council that, to the greatest extent allowed by law, no section, paragraph, sentence, clause or phrase of this Ordinance is mutually dependent upon any other section, paragraph, sentence, clause or phrase of this Ordinance.

(c) In the event that any phrase, clause, sentence, paragraph or section of this Ordinance shall, for any reason whatsoever, be declared invalid, unconstitutional or otherwise unenforceable by the valid judgment or decree of any court of competent jurisdiction, it is the express intent of the Mayor and Council that such invalidity, unconstitutionality or unenforceability shall, to the greatest extent allowed by law, not render invalid, unconstitutional or otherwise unenforceable any of the remaining phrases, clauses, sentences, paragraphs or sections of the Ordinance and that, to the greatest extent allowed by law, all remaining phrases, clauses, sentences, paragraphs and sections of the Ordinance shall remain valid, constitutional, enforceable, and of full force and effect.

Section 5. All ordinances and parts of ordinances in conflict herewith are hereby expressly repealed.

Section 6. This Ordinance was adopted on 11/28, 2022. The effective date of this Ordinance shall be the date of adoption unless otherwise stated herein.

[SIGNATURES BEGIN ON THE FOLLOWING PAGE]

ORDAINED this 28 day of November, 2022.

Barbara Bender, Mayor

Dave Emanuel, Mayor Pro Tem

ATTEST:

Melisa Arnold, City Clerk

Cristy Lenski, Council Member

Solange Destang, Council Member

APPROVED AS TO FORM:

W. Charles Ross, City Attorney
Powell & Edwards, P.C.

Gretchen Schulz, Council Member

Tod Warner, Council Member

EXHIBIT "A"

THIS BLOCK RESERVED FOR THE CLERK OF THE SUPERIOR COURT.

MISCELLANEOUS NOTES

THE IMPROVEMENTS SHOWN HEREON ARE PROPOSED AND ARE SHOWN PER FILES RECEIVED BY THE CLIENT.

THE INDIVIDUAL PARCELS AND INTERIOR STREET RIGHTS-OF-WAY SHOWN HEREON ARE PROPOSED.

PROPERTY CORNERS (1/2" REBAR WITH CAP "LSF619" OR PK NAIL WITH WASHER "LSF619") SHALL BE PLACED AT MAJOR LOT CORNERS AT THE TIME OF FINAL PLAT.

SITE CURRENTLY UNDER CONSTRUCTION AND DEMOLITION, CONDITIONS CHANGING DAILY.

PROPOSED PARCELS

PARCEL 1:	5-STORY PARKING DECK
PARCEL 2A:	4 STORY MULTI-FAMILY APARTMENTS
PARCEL 2B:	4/5 STORY MULTI-FAMILY APARTMENTS
PARCEL 3A:	JAMES SAWYER WAY
PARCEL 3B:	PUBLIC PLAZA
PARCEL 4A:	2 STORY LIBRARY / OFFICE / COMMUNITY SPACE
PARCEL 4B:	PUBLIC MARKET
PARCEL 5A:	OPEN SPACE / LAWN / TREE HOUSE PAVILION
PARCEL 5B:	PUBLIC CORRIDOR
PARCEL 6A:	COMMERCIAL / RESTAURANT
PARCEL 6B:	COMMERCIAL / RESTAURANT
PARCEL 7A:	THOMAS SNELL WAY
PARCEL 7B:	THOMAS SNELL WAY
PARCEL 7C:	GROVE PROMENADE
PARCEL 7D:	OPEN SPACE / LAWN
PARCEL 8:	COMMERCIAL / RESTAURANT
PARCEL 9:	COMMERCIAL / RESTAURANT

LINE TABLE

LINE	BEARING	DISTANCE	LINE	BEARING	DISTANCE
L1	N 39° 52' 04" E	4.18'	L51	S 44° 54' 53" E	39.46'
L2	N 34° 42' 26" E	18.72'	L52	S 34° 42' 26" W	34.72'
L3	S 55° 17' 34" E	18.00'	L53	S 55° 24' 34" E	8.67'
L4	N 34° 42' 26" E	88.91'	L54	N 51° 49' 23" W	15.78'
L5	S 55° 17' 34" E	9.03'	L55	N 32° 22' 51" W	7.18'
L6	N 34° 42' 26" E	8.42'	L56	S 55° 17' 34" E	3.48'
L7	S 55° 17' 34" E	54.94'	L57	S 34° 42' 26" W	6.63'
L8	S 34° 42' 11" W	2.34'	L58	N 55° 24' 34" W	51.20'
L9	S 55° 17' 34" E	55.02'	L59	S 34° 42' 26" W	54.93'
L10	N 34° 42' 26" E	8.48'	L60	S 55° 17' 34" E	13.42'
L11	S 55° 17' 34" E	51.41'	L61	S 34° 42' 26" W	46.34'
L12	N 34° 42' 26" E	8.95'	L62	S 55° 17' 34" E	9.30'
L13	S 55° 17' 34" E	47.31'	L63	N 55° 17' 34" W	52.00'
L14	S 34° 42' 26" W	54.33'	L64	N 55° 17' 34" W	43.65'
L15	S 55° 17' 34" E	34.42'	L65	S 34° 42' 26" W	8.53'
L16	S 55° 17' 31" E	20.14'	L66	S 55° 28' 49" E	51.11'
L17	S 55° 28' 06" W	8.12'	L67	S 34° 42' 45" W	10.81'
L18	S 55° 12' 57" E	18.58'	L68	S 55° 32' 32" W	15.40'
L19	S 55° 17' 34" E	2.96'	L69	N 34° 42' 26" E	42.69'
L20	N 55° 17' 34" W	3.86'	L70	N 55° 12' 37" E	5.10'

SEE SHEET 2 OF 3; A. FOR WATER AND SEWER EASEMENT DETAIL SKETCHES (DEPICTS EASEMENT METES AND BOUNDS). B. PARCEL AREAS SHOWN HEREON.

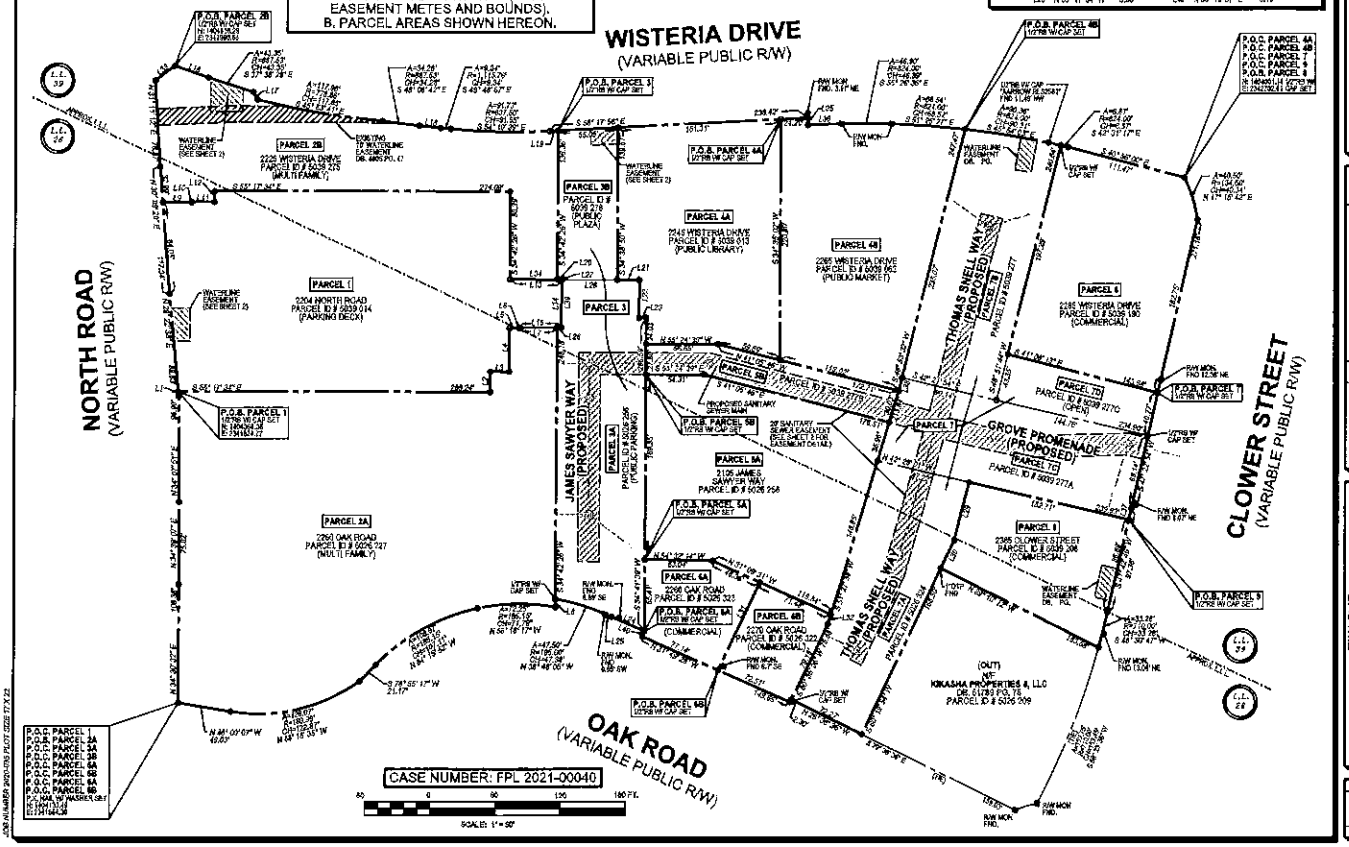

TerraMark

Revision	Date
REVISED PER CITY COMMENTS	07/13/2021
REVISED PER CITY COMMENTS	07/19/2021
REVISED PER CITY COMMENTS	07/26/2021
REVISED PER CITY COMMENTS	08/02/2021
REVISED PER CITY COMMENTS	08/16/2021
REVISED PER CITY COMMENTS	08/18/2021
REVISED PER CITY COMMENTS	08/19/2021
REVISED PER CITY COMMENTS	08/23/2021

FINAL PLAT
FOR
SNELLVILLE TOWNE CENTER, LLC; GWINNETT COUNTY, GEORGIA & LOWER OCONEE DEVELOPMENT AUTHORITY
(THE GROVE AT TOWNE CENTER)
LAND LOTS 28 & 38, 5TH DISTRICT
CITY OF SNELLVILLE, GWINNETT COUNTY, GEORGIA

SHEET NO.
3/3

EXHIBIT "B"

THE GROVE
AT TOWNE CENTER

Comprehensive Sign Plan

Snellville, GA

March 14, 2022

Contents

Purpose and Intent..... 2
General The Grove at Towne Center Comprehensive Sign Plan..... 3
Retail Tenant Sign The Grove at Towne Center Comprehensive Sign Plan 4
Submittals and Approvals for Building Mounted Signs..... 6
Tenant Wall Mounted Signs..... 7
Allowable Sign Types
Plastic Face Channel Letters
Section Details – Illustration B..... 8
Reverse Channel Letters
Section Details – Illustration E..... 9
Canopy Mounted Signs
Illustration F..... 10
Bracket Mounted Signs
Illustration G 11
Sign Location Plan – Illustration J..... 12
Comprehensive Sign Allowance
Retail..... 13
Square Footages Calculation – Illustration K..... 14
Allowable Mounting Locations for Fascia Signs - Illustration O & P & Q 15
Allowable Mounting Location for Architectural Entry Signs - Illustration Q 16
Office & Sq. Ft. Calculation..... 17
Residential..... 18
Project Sign Listing..... 19

Purpose and Intent

The purpose and intent of this Comprehensive Sign Plan is to provide the guidelines necessary to achieve a visually coordinated, balanced and appealing sign environment, harmonious with the architecture of the Project, while maintaining provisions for individual graphic expression. The requirements contained herein are intended to provide adequate exposure for the Occupants merchandising and identification while maintaining the overall appearance critical to the success of the Project.

General The Grove at Towne Center Comprehensive Sign Plan

- The Grove at Towne Center Comprehensive Sign Plan sets forth outlines all the Project requirements for signage.
- Occupant signing is expected to enhance and extend the spirit of the architecture for the Project, expression of the high quality of merchandise and services within.
- Graphic Design shall be imaginative, simple and clear. Signage shall be limited to the logo and/or name of the Occupant. Additional icon/imagery for Occupants will be considered (at the sole discretion of the Landlord/Owner) as long as it contributes to the overall identity of Project and meets all applicable requirements of this document and the City of Snellville Signage Masterplan. Occupants are required to retain the services of a professionally trained graphic designer to create their identity and sign program.

Retail Tenant Sign The Grove at Towne Center Comprehensive Sign Plan

1. All Tenants are required to purchase and install their own signs and pay all costs for installation and any electrical service connections (to the Tenant's individually metered service) as required. The storefront and/or blade signage must be installed on or before Tenant opens for business in Tenant space.

2. After first acquiring Owner/Landlord approvals, all Tenants shall be responsible for applying for and acquiring all permits from the City of Snellville prior to installation.

3. To verify compliance with the design intent of The Grove at Towne Center Comprehensive Sign Plan, the Landlord/Owner reserves the right to disapprove all proposed signs and/or graphic treatment governed by The Grove at Towne Center Comprehensive Sign Plan per the Landlord/Owner's interpretation of The Grove at Towne Center Comprehensive sign Plan, and to require revisions of any sign design which the Landlord/Owner judges not in compliance.

4. To verify compliance with the design intent of The Grove at Towne Center Comprehensive Sign Plan, the City of Snellville reserves the right to disapprove all proposed signs and/or graphic treatment governed by The Grove at Towne Center Comprehensive Sign Plan per City of Snellville's interpretation of The Grove at Towne Center Comprehensive sign Plan, and to require revisions of any sign design which the City of Snellville judges not in compliance.

5. All Tenants shall be responsible for removal of its signs upon termination of lease. Damage caused by the installation or removal of the sign and all penetrations appurtenant to the Tenant's sign installation shall be repaired by the Tenant to the satisfaction of the Landlord/Owner within 30 days of the sign removal. If a sign is damaged by a natural event, such as wind, an engineer certified letter is required. This requirement is the same as Georgia building code ground sign wind load requirements. This requirement applies to both ground and fascia signs.

6. No tenant shall erect, install, paint or affix any signs, posters, cards/banners or other advertising medium to upon or above the exterior of the premises of the building, nor on the exterior of the glass surface of the windows and doors, except as stated herein. Tenant shall be held liable and shall bear all costs for removal and/or correction of sign installation and damage to building by signs that do not conform to The Grove at Towne Center Comprehensive Sign Plan or those signs required to be removed by termination of lease. The Landlord/Owner reserves the right to have all non-conforming, non-permitted, non-approved signs by Landlord/Owner removed regardless of state of erection, by Landlord's/Owner's means at sole expense of the Tenant.

7. The Landlord/Owner reserves the right to make periodic changes to The Grove at Towne Center Comprehensive Sign Plan, when approved by the City of Snellville Planning Director. Any changes approved by the Planning Director cannot change the character and/or nature of the proposed The Grove at Towne Center Comprehensive Sign Plan.

8. Tenants with a national logo, service mark or word mark may use their identification mark and type style subject to the criteria contained within this Comprehensive Sign Plan and City of Snellville approval. Tenants without a locally or nationally recognizable logo may choose a type style for approval and may use a logo or mark on their leased space.

9. Sign fabrication and installation shall comply with any applicable building codes, City of Snellville Zoning Ordinance and the National Electrical Code, and all internal and external wiring, lighting, and other electrical devices shall bear the U.L. symbol. It is the Tenant's responsibility to verify that its sign and installation are in accordance with these requirements and have the Jurisdiction's approval.

10. Tenant is responsible for maintaining its sign in a good state of repair including prompt replacement of burned out lighting or damaged components. Tenant shall promptly initiate repairs and make repairs after being notified in writing by Landlord/Owner.

11. All sign fabrication work shall be of excellent quality. All logo images and type styles shall be accurately reproduced. Lettering that approximates type styles shall not be accepted. The Landlord reserves the right to reject any fabrication work deemed to be below standard.

12. Signs must be made of durable rust-inhibited materials that are appropriate and complementary to the building.

13. All formed metal, such as letter forms, shall be fabricated using full-weld construction.

14. All ferrous and non-ferrous metals shall be separated with non-conductive gaskets to prevent electrolysis. In addition to gaskets, stainless steel fasteners shall be used to secure ferrous to non-ferrous metals.

15. Threaded rod or anchor bolts shall be used to mount sign letters which are spaced out from background panel. Angle clips attached to letter sides will not be permitted.

16. Paint colors and finishes must be reviewed and approved by the Landlord. Color coating shall exactly match the color(s) specified on the approved plans.

17. Finished surfaces of metal shall be free from oil-canning and warping. All sign finishes shall be free of dust, orange peel, drips, and runs and shall have a uniform surface conforming to the highest standards of the industry.

18. Reverse channel letters shall be pinned 2" off building fascia. Signs shall have a clear polycarbonate backing and p.k. housings shall be mounted flush to surface of building.

19. All hardware inside open channel letters shall be painted to match interior letter color. Lighting shall be sufficient to make letters read "solid". Exposed lighting is prohibited.

20. All lighting must match the exact specifications of the approved working drawings. Surface brightness of all illuminated materials shall be consistent in all letters and components of the sign. Light leaks will not be permitted.

21. All conduit, raceways, crossovers, wiring, ballast boxes, transformers and other equipment necessary for sign connection shall be concealed.

22. All penetrations into building wall, where required, shall be sealed and waterproofed. Color and finish to match existing wall.

23. Murals that have been approved by the Landlord will be allowed but will require a Special Use Permit.

24. There shall be no signs that are rotating, revolving, flashing, flickering, moving or audible.

25. No sign shall project above or below the allowable sign area. Landlord approved vertical metal signs attached to the building will be allowed.

26. No signs will be allowed that constitute a Traffic Hazard: any building sign which simulates or imitates in size, color, lettering, design of any traffic sign or signal, or which makes use of the words "STOP", "LOOK", "DANGER" or any words or phrases, symbols or characters in such a manner as to interfere with, mislead or confuse traffic.

27. Signs in close proximity to Utility Lines are prohibited, as prescribed by the laws of the jurisdiction.

28. Advertising or promotional signs on parked vehicles are prohibited in the areas identified on Illustration S. This includes signs on or affixed to trucks, automobiles, trailers or other vehicles which advertise, which are not related to the vehicle's lawful activity. This provision does not apply to service and delivery vehicles of Tenants when engaged in regular business activities (i.e. trucks making deliveries to businesses with the Center).

29. Tenants with outdoor seating or dining will be allowed to have umbrellas with the tenant logo affixed to them, subject to Landlord/Owner approval of size, color, quantity and placement.

30. Temporary signs for commercial spaces less than 15,000 SF shall not exceed thirty (32) square feet, or the maximum allowed by the City of Snellville Zoning Ordinance, may be permitted (i.e. for announcing openings and re-openings after remodels) subject to Landlord/Owner approval. These signs are limited to forty-nine days (49) days per calendar year per the City of Snellville *Zoning Ordinance*. This sign will require approval by the City of Snellville Planning Department.

31. Temporary signs for commercial or residential space greater than 15,000 SF and 2 stories or higher, shall not exceed sixty-four (64) square feet, subject to Landlord/Owner approval. These signs are limited to forty-nine days (49) days per calendar year. This sign will require approval by the City of Snellville Planning Department

32. The Landlord/Owner reserves the right to hire an independent electrical engineer at the Tenant's sole expense to inspect the installation of all Tenant's signage and to require Tenant to have any discrepancies and/or code violations corrected at the Tenant's expense.

33. No exposed lighting is permitted on the exterior of the building, including signs, or in the interior of the storefront to highlight the glazing system.

34. Each Tenant will be allowed to display an "A" frame sign on the front, rear or side of the premises. The design and location of the sign must be approved by landlord. A maximum of two (2) signs are allowed and no more than one (1) sign per side.

35. Temporary signs and banners approved by and in a location designated by Owner/Landlord will be allowed on the construction fencing, construction barricades, building or other temporary measures used during the construction of the mixed-use buildings. The banners will not be greater than 6 feet in height and will be wind screen type if installed on the fencing. The banners can identify existing tenants, future tenants, project promotions or advertising, developer, contractor, designers, lenders and other project related entities.

36. Seasonal and event banners no larger than 12 feet by 15 feet can be displayed on the library, mercantile building, and mixed-use buildings. The banners may be changed from time to time at the Owner / City discretion and with approval by both parties. The Owner will provide standard templates to the town for the event banner.

37. Seasonal and event banners no larger than 21 feet by 21 feet will be allowed to be displayed on the parking deck. The banners may be changed from time to time at the City/Owner's discretion and approved by both parties.

Submittals and Approvals for Building Mounted Signs

A copy of The Grove at Towne Center Comprehensive Sign Plan will be provided to future Tenants by the Landlord/Owner.

Prior to sign fabrication and installation, plans for all proposed signage shall be submitted to the Landlord/Owner who will review plans for conformance with The Grove at Towne Center Comprehensive Sign Plan. All plans submitted for approval mush conform to requirements of The Grove at Towne Center Comprehensive Sign Plan contained in this Comprehensive Sign Plan. The Landlord/Owner shall have the discretionary authority to deny approval for any submittal which does not comply with this Comprehensive Sign Plan. No sign permit application may be made to the City prior to Landlord/Owner's written approval.

For Landlord/Owner signage approval, such submissions shall include three (3) sets of the following:

- Elevations showing all proposed signs indication sign type, design, location size and layout of the sign. Drawing to be to scale indicating dimensions, construction details (including materials, colors and lighting specifications) and attachment method(s).

- Section detail of letters and/or sign or logo element(s) showing attachment detail and with electrical specifications.

For City of Snellville signage approval, such submissions shall include all documents required a time of permit. May include, but not limited to, the following:

- Completed Application
- Fee
- Completed Fee Schedule
- Landlord/Owner's approval letter
- All requirements listed on sign application

Following approval of proposed signage by the Landlord/Owner and the City of Snellville, applications for all permits for fabrication and installation by Sign Contractor shall be submitted to the City of Snellville. Fabrication and installation of all signs shall be performed in accordance with the standards and specifications outlined in this Comprehensive Sign Plan, as well as the final approved plans and working drawings. It is the responsibility of the Tenant's sign company to verify all conduit and transformer locations and service access prior to fabrication.

Tenant shall be responsible for all costs for Building Signage and Site Signage panels as follows:

- Design Consultant fees
- Application and permitting fees
- Sign fabrication, related materials and installation fees (including all plan check and inspection costs)
- Signage removal, including repair of any damage to building. It is the Tenant's responsibility to properly patch and repair all holes and paint the patched and repaired area to match the existing color and finish.

Guidelines for individual building mounted sign types are outlined in the following pages.

Tenant Wall Mounted Signs

A. **Plastic Face Channel Letters.** Remote wired or Self-Contained and Reverse Channel Letters. ***No raceways permitted.*** Maximum filler depth or projection off fascia is to be 12" (see Illustration B for Plastic Face Channel letters and Illustration E for Reverse Channel Letters). Aluminum fillers to be painted with an acrylic polyurethane. Final approval of color to be by Landlord. Welded construction. Acrylic, lexan or polycarbonate letter faces, with or without vinyl graphics. Letters to be internally illuminated with neon tubing using manufacturer's recommended spacing between rows of neon, or LED lighting for maximum illumination. 1" trip cap retainers to match filler color(s).

B. **Reverse Channel Letters.** Remote wired or Self-Contained. Maximum filler depth or projection off of fascia is to be 12". Aluminum fillers and letter faces to be painted with an acrylic polyurethane. Final approval of color to be by Landlord. Welded construction. Lexan or polycarbonate letter backs. Letters to be internally illuminated with neon tubing using manufacturer's recommended spacing between rows of neon for maximum illumination, or LED lighting. See Illustration E.

C. **Non-illuminated 2-dimensional or 3-dimensional individual letters.**

D. **Canopy mounted non-illuminated letters.** See Illustration F.

E. **Externally illuminated letters.** Gooseneck lights allowed for illumination.

F. **Bracket Mounted Signs (Illustration G)**
   - Sign must be stationary and not move.
   - Maximum projection from face of building is 3'-0".
   - Minimum height to bottom of sign is 7'-6".
   - Maximum height to top of sign is not to project above a parapet wall or architectural feature or the limits outlined for sign placement on Illustration O, P, or Q.
   - This shall count as (1) sign with multiple sides.
   - To be mounted only to space of the Tenant.

G. **Vertical Bracket Mounted Signs (Blade Sign) (Illustration H)**
   - **Sign must be stationary and not move.**
   - Maximum projection from face of building is 5'.
   - Minimum height to bottom of sign is 7'-6".
   - Maximum height to top of sign is not to project above a parapet wall or architectural feature or the limits outlined for sign placement on Illustration O, P, or Q.
   - This shall count as (1) sign with multiple sides.
   - To be internally illuminated (if illuminated), no visible neon tubing

Tenant – Plastic Face Channel Letters – Illustration B

Section Details

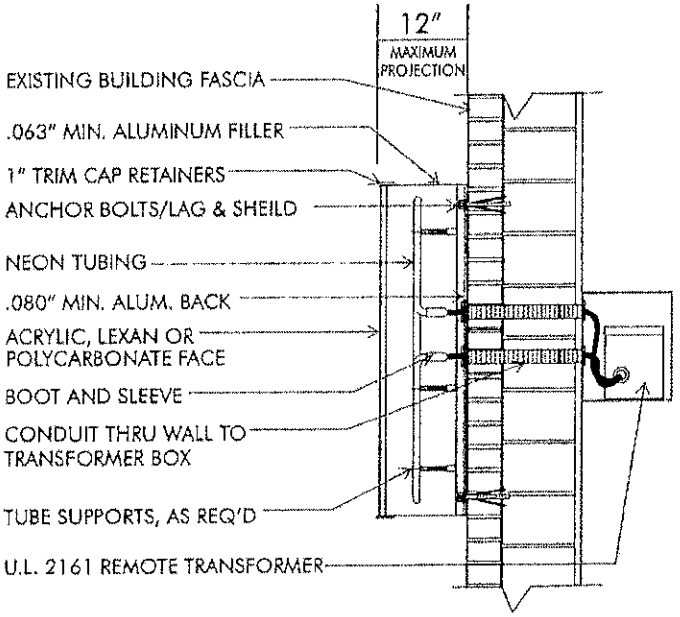

TYPICAL SECTION THRU "REMOTE" LETTERS

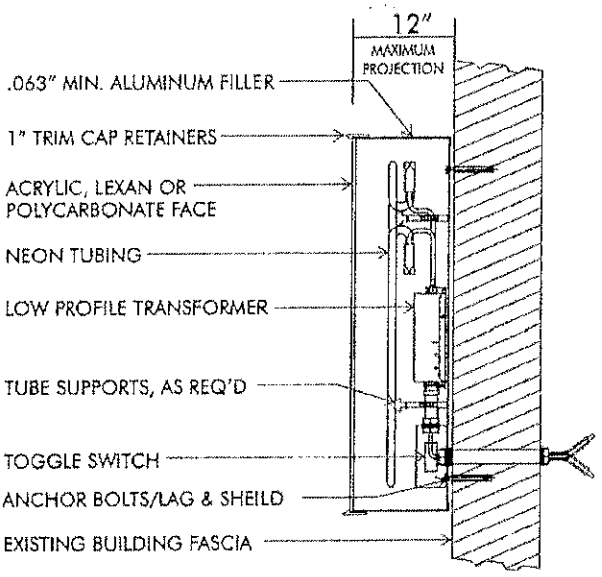

TYPICAL SECTION THRU "SELF CONTAINED" LETTERS

Tenant – Reverse Channel Letters – Illustration E

Section Details

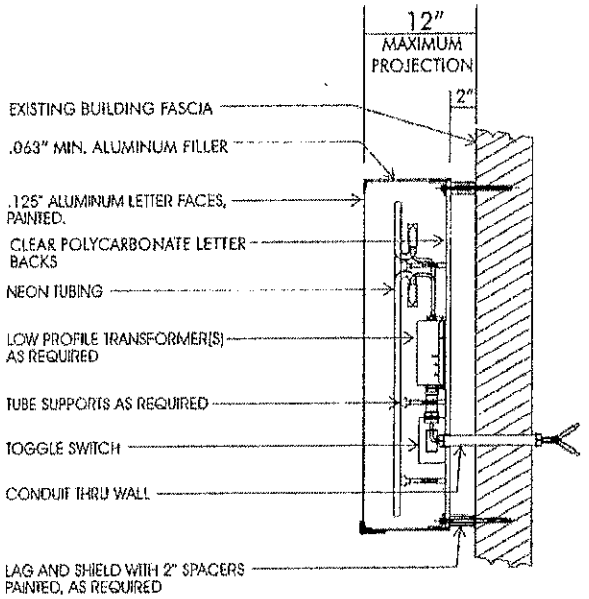

TYPICAL SECTION THRU "REVERSE" CHANNEL LETTERS
SELF-CONTAINED TRANSFORMER

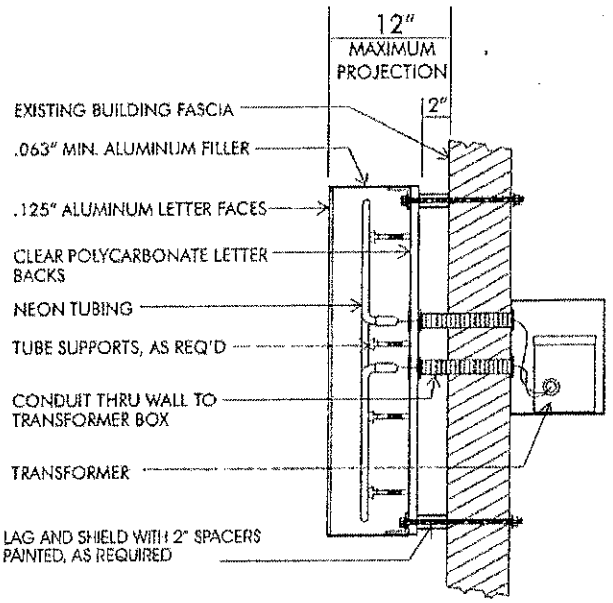

TYPICAL SECTION THRU "REVERSE" CHANNEL LETTERS
REMOTE TRANSFORMER

Tenant – Canopy Mounted Signs – Illustration F

Typical Section Detail – May also include signs on fabric canopies.

*** Note: square footage to be calculated same as shown on Illustration C.**

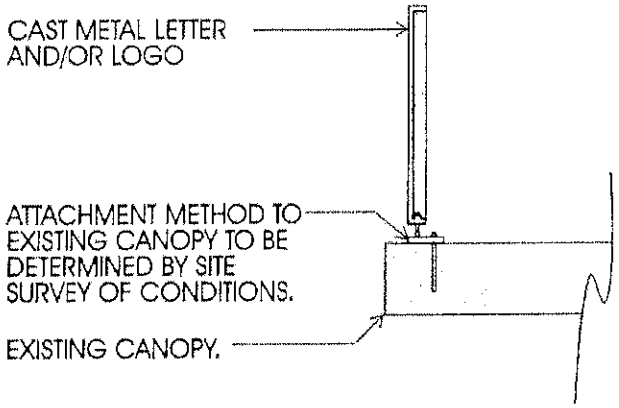

TYPICAL SECTION THRU LETTERS

Tenant – Bracket Mounted Signs – Illustration G

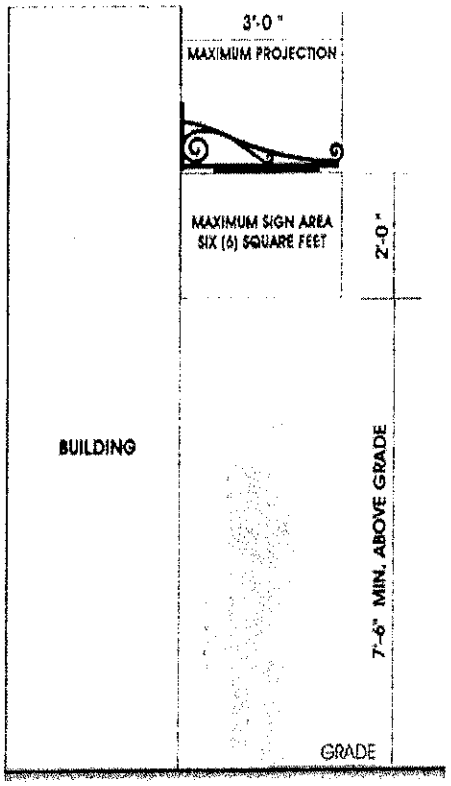

Notes:

- Signs must be "non-swinging", cannot be hung by chain.
- If projecting more than 12", must be listed in deviations.
- Minimum height to bottom of sign is 7'-6" above grade.
- Maximum area of sign panel to be six (6) square feet.

Tenant – Vertical Bracket Mounted Signs (Blade Sign) Illustration - H

Multi-Family Signage

South Elevation

Primary Blade Sign

Blade sign is located on the Northwest corner of the Tomlin Property. The sign protrudes off the South wall of the corner. Messaging on the sign will be facing East and West along Oak Run.

Key Plan

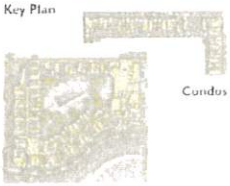

Location Reference

4H Primary Multi-Family Blade Sign

SCALE: 1/4" = 1

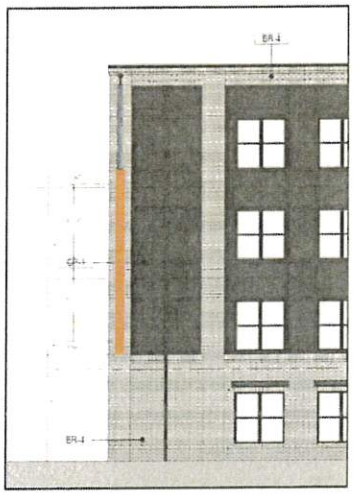

MOUNTED ON CENTER OF VERTICAL COLUMN

SCALE: 1/8" = 1

Comprehensive Sign Allowance

A. RETAIL/OFFICE (Nonresidential) TENANT SIGNAGE

Gross Building Elevation Face Area	Min. Sign Area	Max. Sign Area
1 – 1,000 sf.	36 sf.	5.0% of face areas
1,001 – 2,600 sf.	60 sf.	5.0% of face areas
2,601 - 3,600 sf.	120 sf.	5.0% of face areas
3,601 – 4,500 sf.	140 sf.	5.0% of face areas
Over 4,500 sf.	160 sf.	5.0% of face areas

The gross building elevation face is defined as the area of side of the building from the top finished floor to bottom of parapet. Where more than one main entrance on different sides of the building exists, then both sides may be used to compute total signage allowance for each side. A fascia sign includes: Plastic Face Channel Letters, Reverse Channel Letters, Canopy Mounted, Awning, and Bracket Mounted, depending on which condition Tenant's space is in (see page 7).

Single Tenant Buildings:

A single tenant building shall be limited to three (3) fascia signs. Each building shall:

- Affix the fascia sign on a wall adjacent to the leased space;
- Limit each fascia sign to separate sides of the building with the exception of the bracket sign which may be placed on the same wall as a reverse channel, or canopy mounted fascia sign; however, two fascia signs will be allowed on the same side of the building provided the side with two fascia signs is the entry side of the building;
- Prohibit plastic face channel or reverse channel on the same side of the building as a canopy mounted fascia sign;
- Limit each sign to no more than five percent (5%) of the building wall or minimal sign area, whichever is greater;
- Place the largest of the signs on the side of the building with the main entrance; and
- Fascia signs shall be mounted on the parapet walls of the building or entry structure such that the top of the sign cannot encroach above the bottom of the cornice or eave of said wall (See illustration O & P for sample locations);
- Fascia Signage that is mounted on a City of Snellville approved architectural element shall be allowed such that no more than 50% of the sign be located above the top of the adjacent parapet. See illustration Q for sample location.

Multi-Tenant Buildings:

A multi-tenant building is permitted to place signs on four sides of the building. Each tenant shall:

- Affix the fascia sign on a wall adjacent to the leased space;
- Have no more than three (3) fascia signs;
- Limit each fascia sign to separate sides of the building with the exception of the bracket sign which may be placed on the same wall as a reverse channel, or canopy mounted fascia sign; however, two fascia signs will be allowed on the same side of the building provided the side with two fascia signs is the entry side of the building;
- Limit each sign to no more than five percent (5%) of the building wall or minimal sign area, whichever is greater
- Place the largest of the signs on the side of the building with the main entrance; and
- Limit the square footage for all signs from the total signage allowed. (See Illustration K for how to measure).
- Fascia signs shall be mounted on the parapet walls of the building or entry structures such that the top of the sign cannot encroach above the bottom of the cornice or eave of said wall (See illustration O & P for sample locations);

- Signage that is mounted on a City of Snellville approved architectural element shall be allowed such that no more than 50% of the sign be located above the top of the adjacent parapet. See illustration Q for sample location.

Illustration K – How to Calculate Total Fascia Signage Square Footage Allowance

EXAMPLE

Square Footage Calculation:

Linear feet of leased building / tenant space = 20'- 0"

Vertical Heigh of building to top parapet = 24' – 0"

Gross Building Elevation Face = 20'- 0" x 24' - 0" = 480 sf.

Total square footage allowed 36 sf.

**Where 5% of face sign is less than the minimal sign area allowed the greater sign area will be used.*

Illustration O – Limit of Allowable Area for Fascia Sign Mounting on Multi Tenant Building

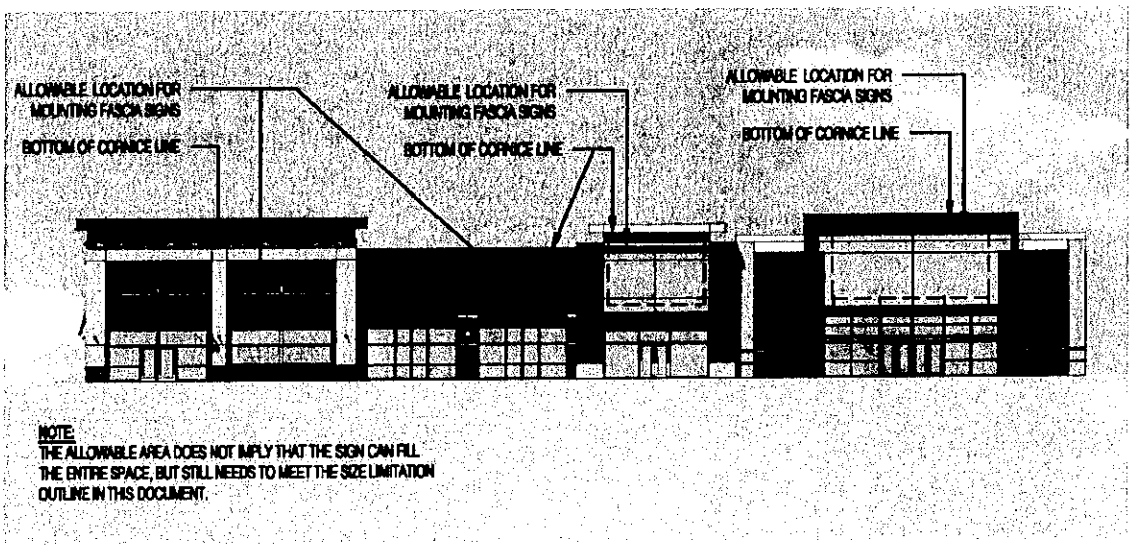

Illustration P – Limit of Allowable Area for Fascia Sign Mounting on Tenant Entry Feature when Gable Roof Shaped

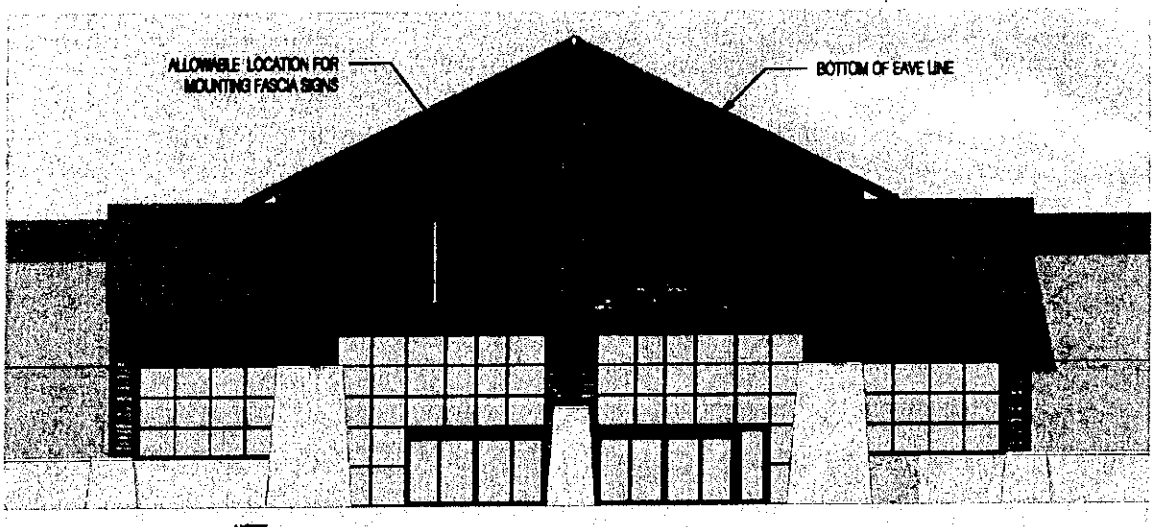

NOTE:
THE ALLOWABLE AREA DOES NOT IMPLY THAT THE SIGN CAN FILL THE ENTIRE SPACE, BUT STILL NEEDS TO MEET THE SIZE LIMITATION OUTLINE IN THIS DOCUMENT.

Illustration Q – Limit of Allowable Area for Fascia Sign Mounting on Architectural Entry Feature

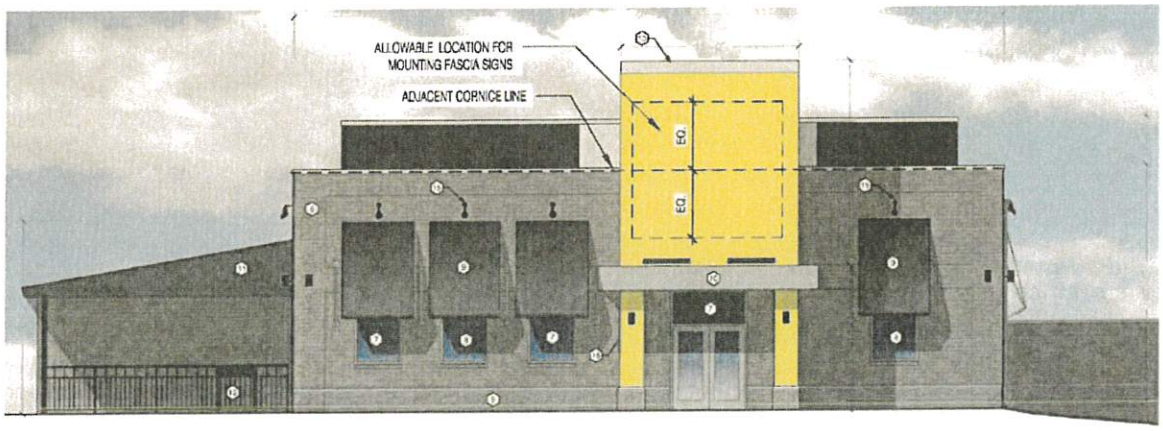

NOTE:
THE ALLOWABLE AREA DOES NOT IMPLY THAT THE SIGN CAN FILL THE ENTIRE SPACE, BUT STILL NEEDS TO MEET THE SIZE LIMITATION OUTLINE IN THIS DOCUMENT.

B. RESIDENTIAL SIGNAGE

This guideline is for use in the stand-alone or mixed-use residential signage on building of The Grove at Towne Center.

The building signage can be vertical blade signs, Illustration H, channel letters, canopy letters or reverse channel letters. Residential identification signage will be limited to eighty-five (85) square feet for blade signs with a projection off the building no greater than 5 feet. Other sign types are limited to 150 square feet per side with max being no greater than 5% of the of the face area. Only one identification sign can be placed on each face of the building.

C. Parking Deck Signage

There are no signage limits or guidelines for signage on the parking deck visible from ROW. City and Owner to both agree on final approved signage.

Project Signage Listing

1. DISPLAY TYPE 1: Primary Entrance Display
   Located: See sign Location Plan, Illustration M1
   Quantity: (1)
   No greater than 80 square feet (excluding the monument base and supporting structure).

2. DISPLAY TYPE 2: Secondary Main Entrance Display
   Located: See sign Location Plan, Illustration M2
   Quantity: (1)
   No greater than 80 square feet (excluding the monument base and supporting structure).

3. DISPLAY TYPE 3: Street Signs and Posts
   Various Locations throughout project
   All street signs and posts will comply with the City of Snellville Signage Masterplan.

4. DISPLAY TYPE 4: Pedestrian Directories
   Located: See Sign Location Plan, Illustration Directional #1 and Information Kiosk

5. DISPLAY TYPE 5: Pole Banner
   Affixed to various poles throughout project.
   All pole banners will comply with the City of Snellville Signage Masterplan.

6. DISPLAY TYPE 6: Project Logos
   Located on site amenities such as benches, street signs, umbrellas, and regulatory signs.
   Project ID only.
   Maximum of one (1) square foot, measured with one rectangle, per amenity.

Sign Location Plan – Illustration J

Illustration M1 and M2 – Primary and Secondary ID Sign

Primary Main ID Sign
North Arrival Point

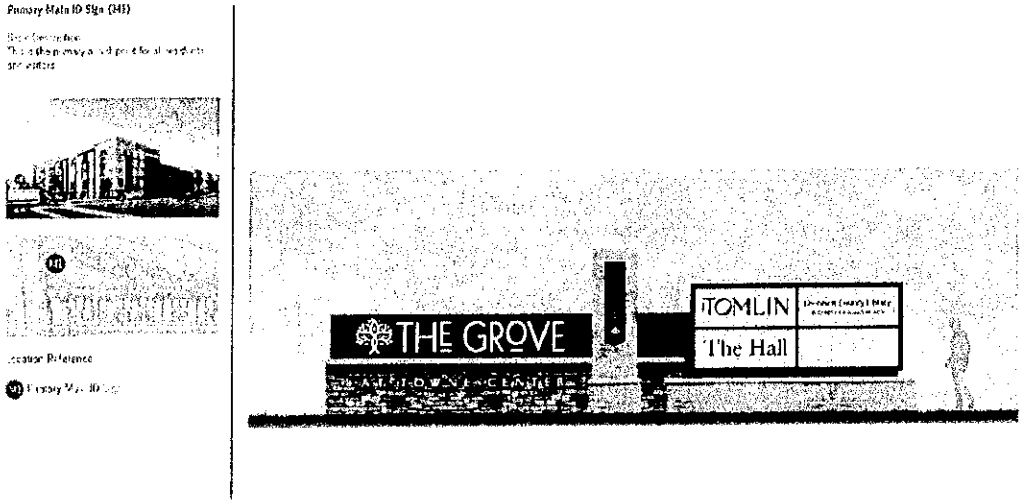

Primary Main ID Sign
South Arrival Point

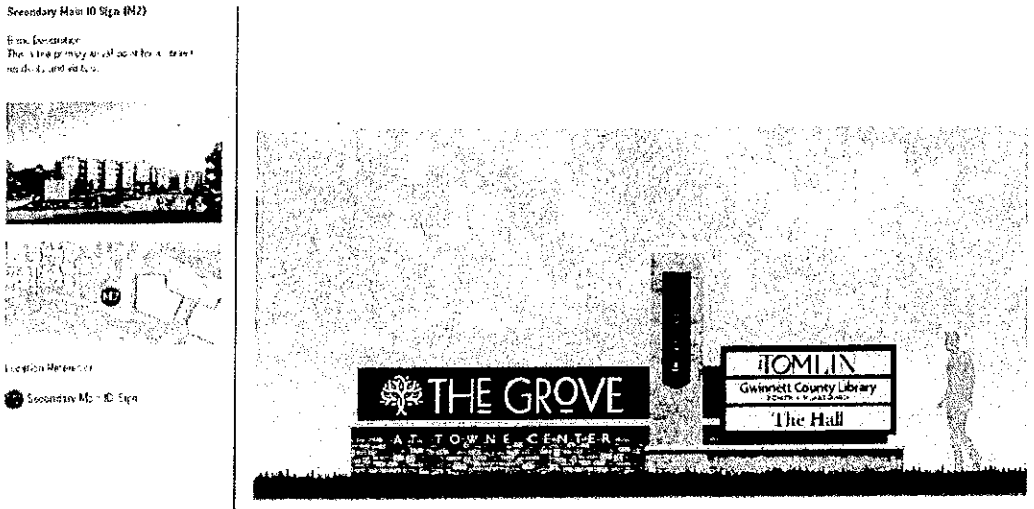

Illustration Directional #1 and Information Kiosk #2

Illustration T – Exterior Signage

EAST ELEVATION
(WISTERIA DRIVE)

SOUTH ELEVATION
(STREET "A")

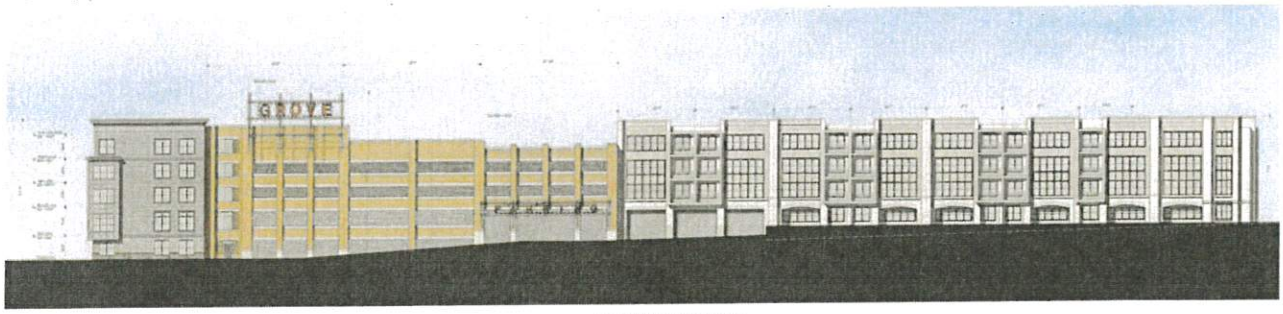

NORTH ELEVATION
(NORTH ROAD)

WEST ELEVATION
(OAK ROAD)

_STATE OF GEORGIA

CITY OF SNELLVILLE

ORDINANCE NO. 2022-20

AN ORDINANCE TO AMEND THE OFFICIAL ZONING MAP OF THE CITY OF SNELLVILLE, GEORGIA, AS AMENDED, FOR A 1.82± ACRE TRACT OF LAND LOCATED IN LAND LOT 56 OF THE 5TH LAND DISTRICT, GWINNETT COUNTY, GEORGIA, 1915 PHARRS ROAD, SNELLVILLE, GEORGIA; TO ADD CONDITIONS AFFECTING THE PROPERTY; TO PROVIDE FOR SEVERABILITY; TO REPEAL CONFLICTING ORDINANCES; TO PROVIDE AN EFFECTIVE DATE; AND FOR OTHER PURPOSES.

CASE NUMBER:	#RZ 22-09
APPLICANT/PROPERTY OWNER:	Park Place Snellville, LLC Lawrenceville, Georgia 30043
LOCATION:	1915 Pharrs Road, Snellville, Georgia (the "Property")
TAX PARCEL:	R5056 362
DEVELOPMENT/PROJECT:	3-Story 100,149 Sq. Ft. Climate Controlled Self-Storage Facility
CONTACT:	Jack Wilson, Esq. Robert Jack Wilson, P.C. 770-962-9780 or jwilson@rjwpclaw.com

WHEREAS, the governing authority of the City of Snellville, Georgia is the Mayor and Council thereof; and,

WHEREAS, the governing authority of the City of Snellville, Georgia desires to amend its official zoning map as it applies to the 1.82± acre tract of undeveloped land located at 1915 Pharrs Road, Snellville, Georgia (Tax Parcel 5056 362) for a climate controlled self-storage facility; and,

WHEREAS, the 1.82± acre tract of land is designated as Commercial Retail on the Snellville 2040 Comprehensive Plan Future Land Use Map; and,

WHEREAS, the Commercial Retail future land use category is the appropriate land use category for the HSB (Highway Service Business) District; and,

WHEREAS, the health, safety, and welfare of the citizens of Snellville, Georgia, will be positively impacted by the adoption of this Ordinance; therefore:

IT IS HEREBY ORDAINED BY THE GOVERNING AUTHORITY OF THE CITY OF SNELLVILLE, GEORGIA, and by the authority thereof:

Section 1. The Official Zoning Map for the City of Snellville, Georgia for the 1.82± acre tract of land described and shown on the final plat entitled "Park Place Snellville, LLC", dated 5-11-2017 (stamped received 9-13-2022) in Exhibit "A", a copy of which is attached hereto and incorporated herein by reference is hereby amended and changed from BG (General Business) District to HSB (Highway Service Business) District, subject to the following enumerated conditions:

CONDITIONS:

1. All variances and conditions applicable to the subject property and previously approved on 7-10-2017 by the Mayor and Council for case #RZ 17-06 LUP 17-04 are hereby repealed.

2. The property shall be developed in general accordance with the rezoning site plan entitled "Proposed Storage Climate Controlled, Snellville, Georgia", dated 9-12-2022 (stamped received 10-26-2022) in Exhibit "B", a copy of which is attached hereto and incorporated herein by reference, including the design rendering as supplied in the applicant's submittals with modifications permitted to meet conditions of zoning or State, County, and City regulations. Substantial variation from the conceptual rezoning site plan, as determined by the Director of Planning and Development will require Mayor and Council approval, after receiving recommendations by the Planning Department and Planning Commission.

3. Uses involving adult entertainment, including the sale or display of adult magazines, books, videos and as further defined by the Adult Entertainment Ordinance in effect on the date this condition is imposed, are prohibited.

4. Signs higher than 15 feet or larger than 225 square feet are prohibited.

Section 2. The changes in zoning classification are to be noted on the Official Zoning Map of the City of Snellville, Georgia as approved by the Mayor and Council as soon as reasonably possible following the adoption of this Ordinance. The Official Zoning Map of the City of Snellville, Georgia, shall also be amended with an editorial note specifying the date these Snellville zoning amendments were approved by the Mayor and Council and specifying the parcels affected by this Ordinance. Until the changes are indicated on the Official Zoning Map of the City of Snellville, Georgia, as approved by the Mayor and Council, this Ordinance shall govern over Official Zoning Map of the City of Snellville, Georgia approved by the Mayor and Council to the extent of any discrepancy between this Ordinance and the Official Zoning Map of the City of Snellville, Georgia approved by the Mayor and Council.

Section 3. The preamble of this Ordinance shall be considered to be and is hereby incorporated by reference as if fully set out herein.

Section 4. (a) It is hereby declared to be the intention of the Mayor and Council that all sections, paragraphs, sentences, clauses and phrases of this Ordinance are or were, upon their enactment, believed by the Mayor and Council to be fully valid, enforceable and constitutional.

(b) It is hereby declared to be the intention of the Mayor and Council that, to the greatest extent allowed by law, each and every section, paragraph, sentence, clause or phrase of this Ordinance is severable from every other section, paragraph, sentence, clause

or phrase of this Ordinance. It is hereby further declared to be the intention of the Mayor and Council that, to the greatest extent allowed by law, no section, paragraph, sentence, clause or phrase of this Ordinance is mutually dependent upon any other section, paragraph, sentence, clause or phrase of this Ordinance.

(c) In the event that any phrase, clause, sentence, paragraph or section of this Ordinance shall, for any reason whatsoever, be declared invalid, unconstitutional or otherwise unenforceable by the valid judgment or decree of any court of competent jurisdiction, it is the express intent of the Mayor and Council that such invalidity, unconstitutionality or unenforceability shall, to the greatest extent allowed by law, not render invalid, unconstitutional or otherwise unenforceable any of the remaining phrases, clauses, sentences, paragraphs or sections of the Ordinance and that, to the greatest extent allowed by law, all remaining phrases, clauses, sentences, paragraphs and sections of the Ordinance shall remain valid, constitutional, enforceable, and of full force and effect.

Section 5. Penalties in effect for violations of Chapter 1 of the Code of Ordinances, City of Snellville, Georgia at the time of the effective date of this Ordinance shall be and are hereby made applicable to this Ordinance and shall remain in full force and effect.

Section 6. All ordinances and parts of ordinances in conflict herewith are hereby expressly repealed

Section 7. This Ordinance was adopted on 11/28, 2022. The effective date of this Ordinance shall be the date of adoption unless otherwise stated herein.

[SIGNATURES BEGIN ON THE FOLLOWING PAGE]

ORDAINED this _____ day of _____, 2022.

_____
Barbara Bender, Mayor

ATTEST:

_____
Dave Emanuel, Mayor Pro Tem

_____
Melisa Arnold, City Clerk

_____
Cristy Lenski, Council Member

APPROVED AS TO FORM:

_____
Solange Destang, Council Member

_____
W. Charles Ross, City Attorney
Powell & Edwards, P.C.

_____
Gretchen Schulz, Council Member

_____
Tod Warner, Council Member

ORDAINED this 28 day of November, 2022.

Barbara Bender, Mayor

Dave Emanuel, Mayor Pro Tem

ATTEST:

Melisa Arnold, City Clerk

Cristy Lenski, Council Member

Solange Destang, Council Member

APPROVED AS TO FORM:

W. Charles Ross, City Attorney
Powell & Edwards, P.C.

Gretchen Schulz, Council Member

Tod Warner, Council Member

EXHIBIT "A"

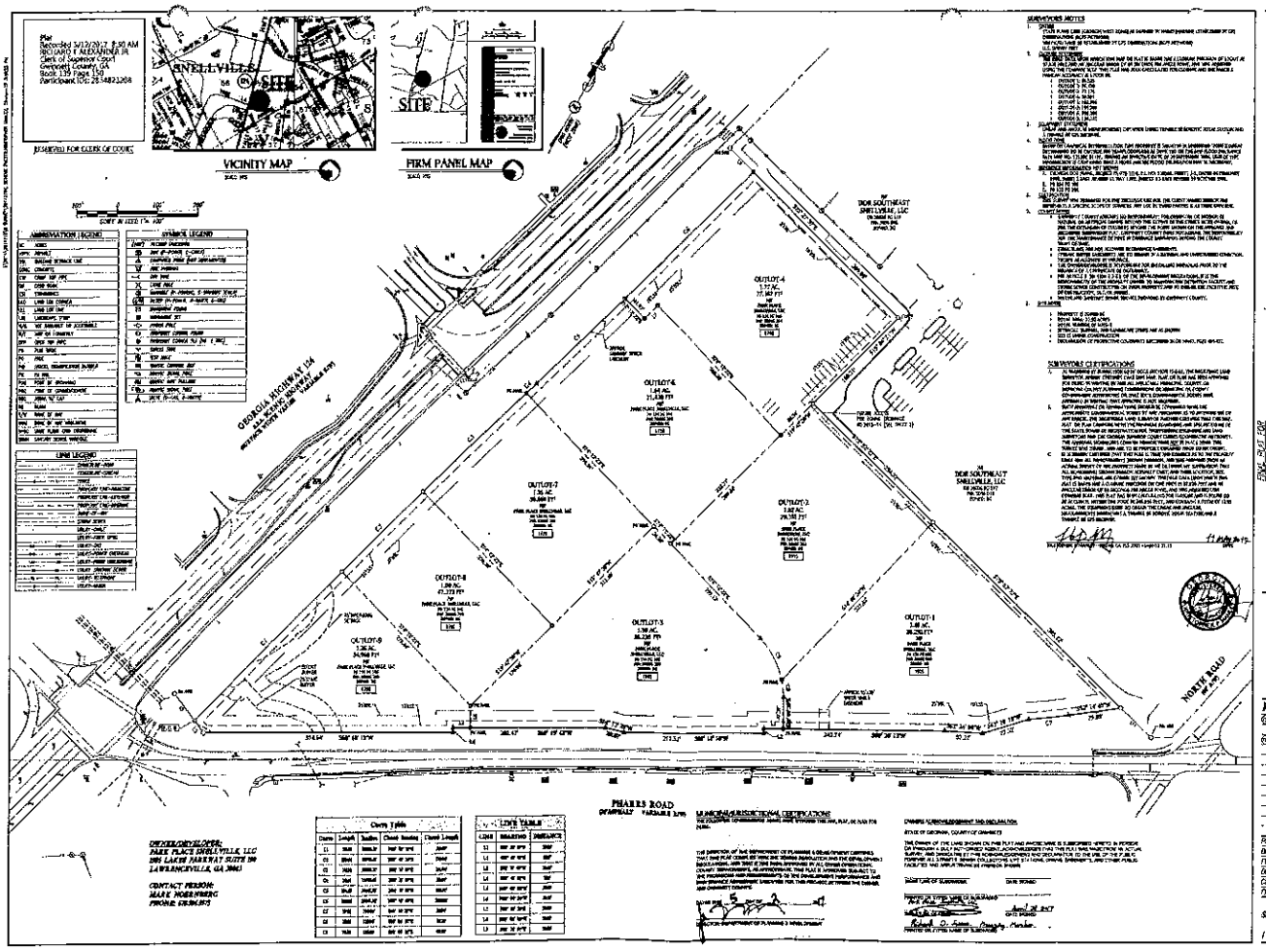

PAULSON MITCHELL INCORPORATED
Land Planning
Surveying
Transportation
Landscape Architecture
RECEIVED
SEP 13 2022
CITY OF SNELLVILLE
PLANNING & DEVELOPMENT

FINAL PLAT FOR

PARK PLACE SNELLVILLE, LLC

LAND LOT(S) 5[illegible]-5[illegible]TH DISTRICT
CITY OF SNELLVILLE—GWINNETT COUNTY, GEORGIA

RECEIVED
APR 13 '22
CITY OF SNELLVILLE
PLANNING & DEVELOPMENT

REVISIONS

PROJECT NUMBER: 2014-019
DATE: 20 APRIL 2016
FIELD DATE: 15 MARCH 2016
DRAWN BY: KJAMMEY
CHECKED BY: DJONES
FILE NAME: 2014-019CFINAL

SHEET
1 OF 1

EXHIBIT "B"

PARKING ANALYSIS

Storage Building:

1st Floor	33,383 SF
2nd Floor	33,383 SF
3rd Floor	33,383 SF

TOTAL BUILDING: 100,149 SF

Parking Provided: 19 cars (.95/5k)

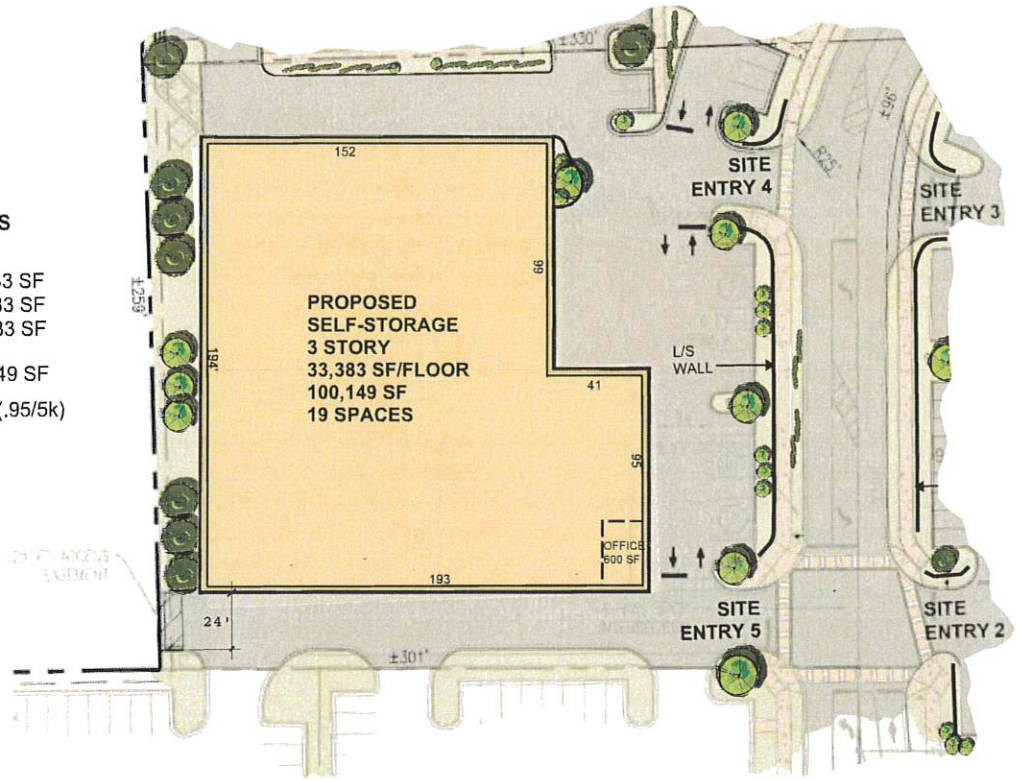

STORAGE SITE PLAN

0 30 60

Swope & DeThomas Investment Group, LLC

PROPOSED STORAGE
CLIMATE CONTROLLED
SNELLVILLE, GEORGIA

REZONING/SUP SUBMITTAL SEPTEMBER 12, 2022

HFR HILL FOLEY ROSSI
ARCHITECTURE ▪ ENGINEERING

STATE OF GEORGIA

CITY OF SNELLVILLE

ORDINANCE NO. 2022-21

AN ORDINANCE TO AMEND THE OFFICIAL ZONING MAP OF THE CITY OF SNELLVILLE, GEORGIA, AS AMENDED, FOR A 1.82± ACRE TRACT OF LAND LOCATED IN LAND LOT 56 OF THE 5TH LAND DISTRICT, GWINNETT COUNTY, GEORGIA, 1915 PHARRS ROAD, SNELLVILLE, GEORGIA; TO GRANT A SPECIAL USE PERMIT; TO ADD CONDITIONS AFFECTING THE PROPERTY; TO PROVIDE FOR SEVERABILITY; TO REPEAL CONFLICTING ORDINANCES; TO PROVIDE AN EFFECTIVE DATE; AND FOR OTHER PURPOSES.

CASE NUMBER:	#SUP 22-06
APPLICANT/PROPERTY OWNER:	Park Place Snellville, LLC Lawrenceville, Georgia 30043
LOCATION:	1915 Pharrs Road, Snellville, Georgia (the "Property")
TAX PARCEL:	R5056 362
DEVELOPMENT/PROJECT:	3-Story 100,149 Sq. Ft. Climate Controlled Self-Storage Facility
CONTACT:	Jack Wilson, Esq. Robert Jack Wilson, P.C. 770-962-9780 or jwilson@rjwpclaw.com

WHEREAS, the governing authority of the City of Snellville, Georgia is the Mayor and Council thereof; and

WHEREAS, the governing authority of the City of Snellville, Georgia desires to amend its official zoning map as it applies to the 1.82± acre tract of land located at 1915 Pharrs Road, Snellville, Georgia (Tax Parcel R5056 362) and grant the requested special use permit for an Indoor Multi-Story Self-Storage Facility; and,

WHEREAS, the health, safety, and welfare of the citizens of Snellville, Georgia, will be positively impacted by the adoption of this Ordinance; therefore:

IT IS HEREBY ORDAINED BY THE GOVERNING AUTHORITY OF THE CITY OF SNELLVILLE, GEORGIA, and by the authority thereof:

Section 1. For reasons stated in the public hearing and recommendations of the Planning Department and Planning Commission, a special use permit is hereby granted for the development and use of a indoor multi-story self-storage facility on the 1.82± acre tract of land located at 1915 Pharrs Road, Snellville, Georgia (Tax Parcel R5056 362), described and shown on the final plat entitled "Park Place Snellville, LLC", dated 5-11-2017 (stamped received 9-13-2022) in Exhibit "A", a copy of which is attached hereto and incorporated herein by reference, subject to the following enumerated conditions:

CONDITIONS:

1. 1. All variances and conditions applicable to the subject property and previously approved on 7-10-2017 by the Mayor and Council for case #RZ 17-06 LUP 17-04 are hereby repealed.

2. The property shall be developed in general accordance with the rezoning site plan entitled "Proposed Storage Climate Controlled, Snellville, Georgia", dated 9-12-2022 (stamped received 10-26-2022) in Exhibit "B", a copy of which is attached hereto and incorporated herein by reference, including the design rendering as supplied in the applicant's submittals with modifications permitted to meet conditions of zoning or State, County, and City regulations. Substantial variation from the conceptual rezoning site plan, as determined by the Director of Planning and Development will require Mayor and Council approval, after receiving recommendations by the Planning Department and Planning Commission.

3. Uses involving adult entertainment, including the sale or display of adult magazines, books, videos and as further defined by the Adult Entertainment Ordinance in effect on the date this condition is imposed, are prohibited.

4. Signs higher than 15 feet or larger than 225 square feet are prohibited.

Section 2. The special use permit shall expire after twelve (12) months from date of approval unless a certificate of occupancy or occupational tax license has been approved for the special use. The Director of Planning and Development may extend authorization for an additional period of six (6) months for reasons such as health, financial, or administrative problems incurred by the applicant during the permit period. The director must make a finding that the delay is justified by circumstances beyond the applicant's control, and that the six-month extension can reasonably be expected to remedy the circumstances.

Section 3. The preamble of this Ordinance shall be considered to be and is hereby incorporated by reference as if fully set forth herein.

Section 4. The changes in zoning classification is to be noted on the Official Zoning Map of the City of Snellville, Georgia as approved by the Mayor and Council as soon as reasonably possible following the adoption of this Ordinance. The Official Zoning Map of the City of Snellville, Georgia, shall also be amended with an editorial note specifying the date these Snellville zoning amendments were approved by the Mayor and Council and specifying the parcels affected by this Ordinance. Until the changes are indicated on the Official Zoning Map of the City of Snellville, Georgia, as approved by the Mayor and Council, this Ordinance shall govern over Official Zoning Map of the City of Snellville, Georgia approved by the Mayor and Council to the extent of any discrepancy between this Ordinance and the Official Zoning Map of the City of Snellville, Georgia approved by the Mayor and Council.

Section 5. (a) It is hereby declared to be the intention of the Mayor and Council that all sections, paragraphs, sentences, clauses and phrases of this Ordinance are or were,

upon their enactment, believed by the Mayor and Council to be fully valid, enforceable and constitutional.

(b) It is hereby declared to be the intention of the Mayor and Council that, to the greatest extent allowed by law, each and every section, paragraph, sentence, clause or phrase of this Ordinance is severable from every other section, paragraph, sentence, clause or phrase of this Ordinance. It is hereby further declared to be the intention of the Mayor and Council that, to the greatest extent allowed by law, no section, paragraph, sentence, clause or phrase of this Ordinance is mutually dependent upon any other section, paragraph, sentence, clause or phrase of this Ordinance.

(c) In the event that any phrase, clause, sentence, paragraph or section of this Ordinance shall, for any reason whatsoever, be declared invalid, unconstitutional or otherwise unenforceable by the valid judgment or decree of any court of competent jurisdiction, it is the express intent of the Mayor and Council that such invalidity, unconstitutionality or unenforceability shall, to the greatest extent allowed by law, not render invalid, unconstitutional or otherwise unenforceable any of the remaining phrases, clauses, sentences, paragraphs or sections of the Ordinance and that, to the greatest extent allowed by law, all remaining phrases, clauses, sentences, paragraphs and sections of the Ordinance shall remain valid, constitutional, enforceable, and of full force and effect.

Section 6. All ordinances and parts of ordinances in conflict herewith are hereby expressly repealed.

Section 7. This Ordinance was adopted on 11/28, 2022. The effective date of this Ordinance shall be the date of adoption unless otherwise stated herein.

ORDAINED this 28 day of November, 2022.

Barbara Bender, Mayor

Dave Emanuel, Mayor Pro Tem

ATTEST:

Melisa Arnold, City Clerk

Cristy Lenski, Council Member

Solange Destang, Council Member

APPROVED AS TO FORM:

W. Charles Ross, City Attorney
Powell & Edwards, P.C.

Gretchen Schulz, Council Member

Tod Warner, Council Member

EXHIBIT "A"

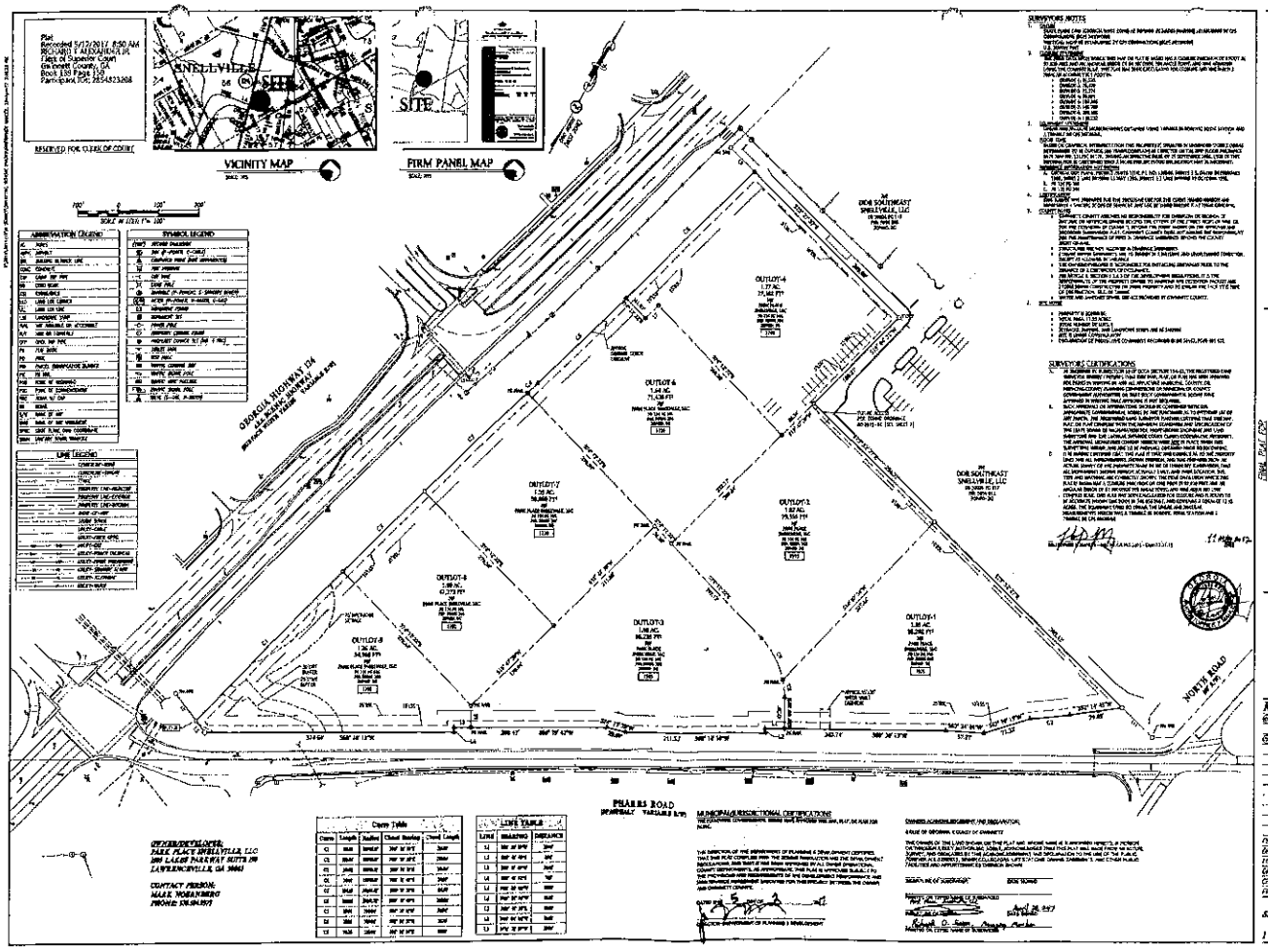
VICINITY MAP
FIRM PANEL MAP
SNELLVILLE
SITE
GEORGIA HIGHWAY 124
PEARRS ROAD
NORTH ROAD
OUTLOT-1
OUTLOT-2
OUTLOT-3
OUTLOT-4
OUTLOT-5
OUTLOT-6
OUTLOT-7
OUTLOT-8
DOR SOUTHEAST SNELLVILLE, LLC
PARK PLACE SNELLVILLE, LLC
PAULSON MITCHELL INCORPORATED
RECEIVED
SEP 13 2022
CITY OF SNELLVILLE
PLANNING & DEVELOPMENT
RECEIVED
APR 25 '07
CITY OF SNELLVILLE
PLANNING & DEVELOPMENT
REVISIONS
PROJECT NUMBER: 3C14210
DATE: 20 APRIL 2018
FIELD DATE: 15 MARCH 2018
DRAWN BY: K.KANNEY
CHECKED BY: B.BANKS
FILE NAME: 3C14210FINALDWG
SHEET
1 OF 1

EXHIBIT "B"

PARKING ANALYSIS

Storage Building:

1st Floor	33,383 SF
2nd Floor	33,383 SF
3rd Floor	33,383 SF

TOTAL BUILDING: 100,149 SF

Parking Provided: 19 cars (.95/5k)

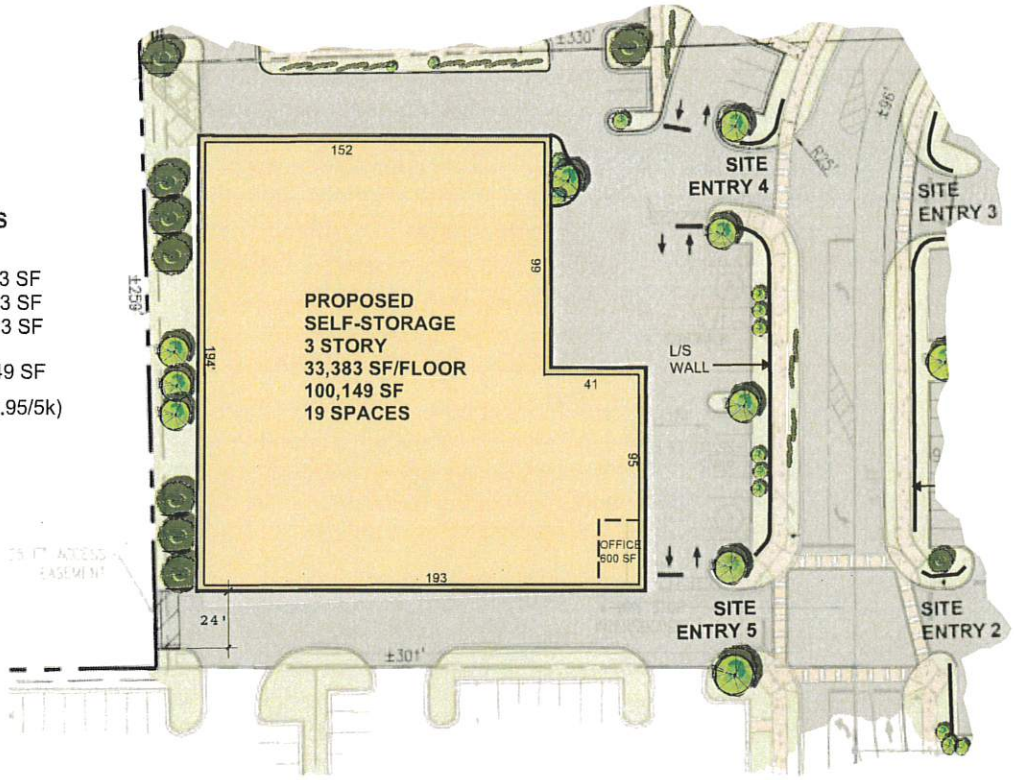

STORAGE SITE PLAN

0 30 60

Swope & DeThomas Investment Group, LLC

PROPOSED STORAGE
CLIMATE CONTROLLED
SNELLVILLE, GEORGIA

REZONING/SUP SUBMITTAL SEPTEMBER 12, 2022

HFR HILL FOLEY ROSSI
ARCHITECTURE • ENGINEERING